CHALMERS

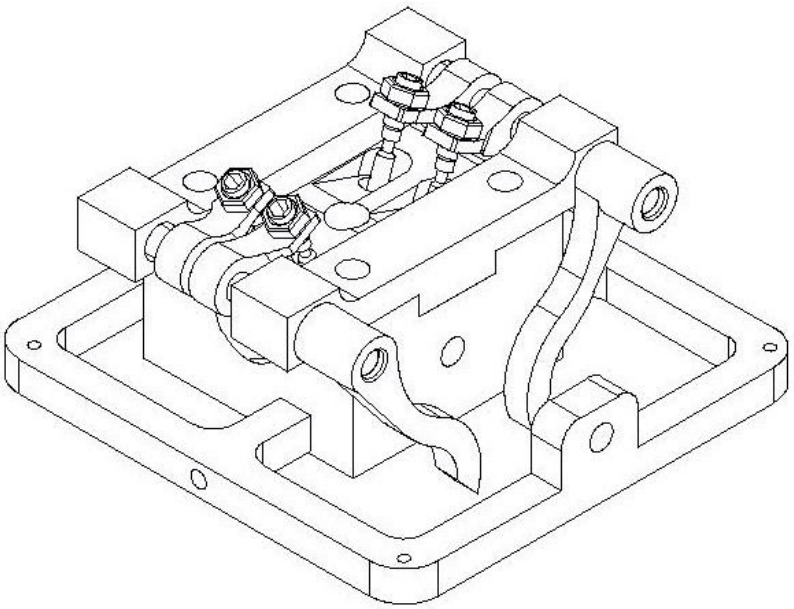

Cylinder head for Eco-marathon vehicle

A development to optimize flow and energy efficiency

Bachelor thesis project in Applied Mechanics

MATS BRODIN
FREDRIK DANIELSSON
KARA GHASEMIANI
ANDERS SEGERLUND
ANDERS SJÖSTAD
FREDRIK WIBORG

Department of Applied Mechanics
Division of Combustion
Chalmers University of Technology
Gothenburg, Sweden, 2012

Bachelor thesis project 2012:01

BACHELORS THESIS 2012:01

Cylinder head for Eco-marathon vehicle

A development to optimize flow and energy efficiency

Bachelor thesis project in Applied Mechanics

MATS BRODIN

FREDRIK DANIELSSON

KARA GHASEMIANI

ANDERS SEGERLUND

ANDERS SJÖSTAD

FREDRIK WIBORG

Department of Applied Mechanics
Division of Combustion
CHALMERS UNIVERSITY OF TECHNOLOGY
Gothenburg, Sweden, 2012

Cylinder head for Eco-marathon vehicle
A development to optimize flow and energy efficiency
Bachelor thesis project in applied mechanics
MATS BRODIN, FREDRIK DANIELSSON, KARA GHASEMIANI, ANDERS SEGERLUND, ANDERS SJÖSTAD, FREDRIK WIBORG

© MATS BRODIN, FREDRIK DANIELSSON, KARA GHASEMIANI, ANDERS SEGERLUND, ANDERS SJÖSTAD, FREDRIK WIBORG, 2012

Bachelor thesis project 2012:01
ISSN 1654-4676
Department of Applied Mechanics
Division of Combustion
CHALMERS UNIVERSITY OF TECHNOLOGY
Gothenburg, Sweden, 2012
SE-412 96 Gothenburg
Sweden
Telephone: + 46 (0)31-772 1000

Cover:
A sketch of the remodeled cylinder head.

Chalmers reproservice
Gothenburg, Sweden 2012

Abstract

The Shell Eco-marathon is held annually where universities around the world compete to, with a vehicle, travel the longest possible distance on one liter of petrol or an equivalent amount of energy. Chalmers University of Technology participates with the vehicle Vera. Vera is continuously developed through bachelor theses as well as independent projects.

This project is an experimental study of cylinder head characteristics for the four stroke engine in the Vera vehicle. The aim of the study is to produce a cylinder head that reduces the fuel consumption of the engine. In the initial phase, facts are gathered about cylinder head characteristics that affect the fuel consumption. The second step is to collect information and with consideration taken to current limitations, model four different and improved cylinder head prototypes that are printed in plastic with a rapid prototyping printer. Flow and tumble measurements are conducted on the prototypes to decide which is most suitable for further development and manufacturing but also to evaluate how different properties affect flow and tumble.

To make manufacturing of the new cylinder head possible with its advanced shapes, a fixture is constructed for later processing of the cylinder head in a CNC mill. To be able to integrate the finished construction with the existing engine configuration certain surrounding parts were reconstructed such as valve guides, valve rockers, spark plugs and cam bridges.

Sammanfattning

Årligen anordnas Shell Eco-Marathon där högskolor runt om i världen tävlar om att, med ett fordon, färdas längsta möjliga sträcka på en liter bensin. Chalmers tekniska högskola ställer upp med bilen Vera. Vera utvecklas kontinuerligt genom såväl kandidatarbeten som genom fristående projektarbeten.

Detta projekt handlar om en experimentell studie av topplockskarakteristik till den fyrtaktsmotor som används i bilen Vera. Syftet med studien är att tillverka ett topplock som sänker bilens bränsleförbrukning. Utgångspunkten i studien ligger i insamling av fakta kring topplockskarakteristik som påverkar bränsleförbrukningen. Nästa steg var att med insamlad information och med hänsyn tagen till givna begränsningar modellera fyra olika och förbättrade topplocksprototyper som tillverkas i plast med en friformsskrivare. Flödes- och tumbletester görs med dessa prototyper dels för att avgöra vilken som är bäst lämpad för vidareutveckling och tillverkning men även för att evaluera hur olika egenskaper påverkar flöde och tumblerörelsen.

För att möjliggöra tillverkning av det nya topplocket i skolans prototypverkstad konstrueras en fixtur för senare bearbetning av topplocket i CNC-fräs. För att integrera den färdiga konstruktionen med den befintliga motorkonfigurationen gjordes även omkonstruktion av kringliggande delar som ventilstyrning, vipparmar, tändstift och bryggor.

Contents

Abstract 0

Sammanfattning 0

List of abbreviations 2

Thank you 3

1. Introduction 1

1.1 Background 1

1.2 Objective 1

2. Theory 2

2.1 Combustion chamber 2

2.2 Valves 4

2.3 Inlet and exhaust ports 5

3. Method and application 7

3.1 Combustion chamber 7

3.2 Valves 8

3.3 Inlet and exhaust ports 8

3.4 Rapid prototyping 9

3.5 Flow testing 10

3.6 Tumble testing 11

4. Results & production 12

4.1 Cylinder head and fixture 14

4.2 Spark plug 15

4.3 Cam bridge 17

4.4 Valve springs 18

5. Conclusion 19

6. References 20

Appendix 1 – Spring details 21

List of abbreviations

CAD – Computer Aided Design
CFD – Computational Fluid Dynamics
Matlab – Programming software
cfm – Cubic Feet per Meter
CNC – Computer Numerical Controlled
CMM – Coordinate Measuring Machine
CAM – Computer Aided Modeling
EGR – Exhaust Gas Recirculation

Thank you

We would like to thank the following people for their contributions:

- Rolf Hellqvist at GotSprings Sweden AB
- Göran Ljungek at Sandvik Coromant AB
- Manne Gustafsson at KGK
- Fredrik Johansson at Husqvarna Construction Equipment AB
- Andreas Widroth, student at Chalmers University of Technology
- Alexander Buchka, student at Chalmers University of Technology

1. Introduction

The society today is more and more striving towards fuel effectiveness and a decreased exploitation of the resources of the earth. The focus of the engineering societies and product developers as well as the consumers has shifted towards environmentally friendly solutions. The Shell Eco-marathon challenges high school and college students from around the world to design, build and test energy efficient vehicles. With annual events in the Americas, Europe and Asia, the winners are the teams that go the farthest distance on one liter of petrol (or the equivalent amount of energy from other sources).

1.1 Background

Chalmers University has participated in the Shell Eco-marathon since 2006[1]. In 2010 a new engine was designed. The engine is custom built with standardized Honda parts from a model GX35 engine and a 25cc cylinder. Since then, every year a group or several groups studying Mechanical Engineering have been given the task to develop and improve the vehicle as a bachelor thesis. This project is such a development where the task is to develop the cylinder head of the engine. The cylinder head is a key part of the engine that greatly affects fuel efficiency and power. It is located on top of the cylinder and its general function is to deliver the fuel mixture to the cylinder, ignite it and to dispose the exhausts. The cylinder head from the 2011 engine is a two-valve model with double sparkplugs and a spherical design. The inlet and exhaust ports are relatively simple and straightforward (see fig. 1.1-2).

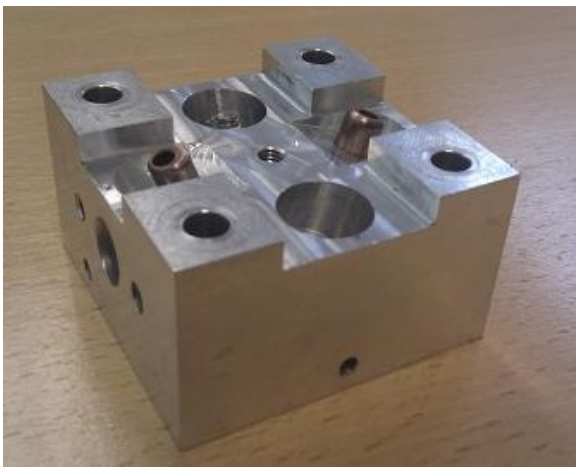

Fig. 1.1: Current cylinder head



Fig. 1.2: Bottom view of cylinder head

1.2 Objective

The objective is to improve the cylinder head regarding fuel efficiency and to manufacture a working prototype. In order to accomplish this objective, plastic prototypes will be produced and evaluated in order to choose a winning concept. Due to the limited timeline the cylinder head is to be designed so that as little as possible of the surrounding components will be affected. The objective does not include cam transmission, redesign of the cylinder, valve timing and valve lift.

2. Theory

In order to better grasp the task at hand the cylinder head was divided into three main components:

- Combustion chamber
- Valves
- Inlet and exhaust ports

These aspects are analyzed thoroughly and information is searched through the Internet, the SAE Database (Society of Automotive Engineering) as well as consultation with Ingemar Denbratt, professor in combustion engine technology and supervisor Anders Johansson, PhD student. Combined with these forums is also the personal knowledge of combustion engines within the group.

2.1 Combustion chamber

The combustion chamber is where the fuel is burned and energy is released and transferred to run the engine. To minimize heat losses the combustion sequence should transpire as fast as possible and there are several ways to accomplish this. A certain kind of turbulence is wanted in the combustion chamber when the ignition occurs due to the fact that an increased motion contributes to faster oxidation of the fuel mixture. Two different types of turbulence wanted in combustion engines are swirl and tumble which are discussed further in section 2.3.

The shape of the combustion chamber determines how the engine is run and a rule of thumb is to minimize the surface area in order to minimize the heat losses. The development of combustion engines has however led to the need to design the combustion chamber in ways that increase the surface area.

Spark plugs

The sparkplug ignites the fuel mixture. In dual valve cylinder heads the excess surface allows for two spark plugs instead of one (see fig. 2.1). The advantage of having two sparkplugs is that the risk of knock is minimized. Two flame fronts are induced which increase the speed of the combustion process which allows for a shorter period of time that knock can appear. When two spark plugs are used they need to be placed equally distant from the cylinder wall as the center of the cylinder. Two sparkplugs however have the disadvantage of increased heat losses.

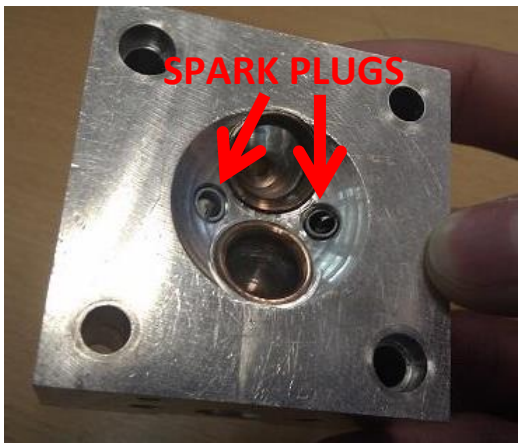

Fig. 2.1: Spherical cylinder head with two spark plugs

Pent-roof design

Cylinder heads with two valves usually have a spherical shape of the cylinder head ceiling (see fig. 2.1) When there are more than two valves a so called pent-roof design is required where the inside of the cylinder head has a V-shaped form (see fig. 2.2). This is due to the limitation of the camshaft that requires the valve shafts to be parallel and aligned. Pent-roof is a layout that increases the surface area of the combustion chamber.



Fig. 2.2: Cylinder head with pent-roof design [2]

Piston shape

The different cylinder head shapes have led to the development of different surface shapes of the piston in order to match the cylinder head and to optimize flow and turbulence. For this reason many pent-roof design cylinder heads are matched with pent-roof designed pistons as well. The valve opening overlap sometimes also requires cutouts in the piston for the valves not to get struck by the piston in its top dead center (see fig. 2.3).



Fig. 2.3: Piston with cutouts to match cylinder design

Squish

Squish flow control is a key technology for increasing the turbulence at the end of the compression phase to allow for a faster combustion in spark ignition engines. The outer edges of the cylinder are lowered to be planar with the surface of the piston so that when the piston is in its upper dead center it creates a burst of turbulence against the squish surface. Squish increases the risk for knock, mainly due to two reasons. The pressure increases faster in the squish area which increase the risk for knocking. A squish area might also become a so called hot zone which impacts the knocking sensitivity.

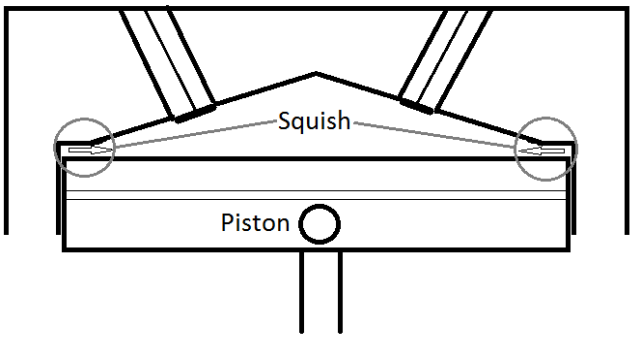

Fig. 2.4: Squish visualization

2.2 Valves

When the flow of fuel mixture reaches the open valves it is slowed down and pump work losses are developed. These losses have to be avoided to as great extent as possible. The shape of the valves are therefore of vital importance. A high mass flow into the cylinder increases the volumetric efficiency. The volumetric efficiency is a measure of the amount of air flowing into the combustion chamber. This has a direct impact of how efficient the cylinder volume is used and hence the fuel consumption effectiveness [3].The valves can be modified to increase the volumetric efficiency by covering a larger surface area which can be done in two ways; either valves with a larger diameter or more, smaller valves. If circular valves are to be used, the greatest area is achieved by increasing the number of valves due to the limitation of one big valve leaving the surrounding surface unused. Valves can however be made non circular although the production cost then increases dramatically as well as the risks for leakage. There is also a downside to having as large valves as possible which is that they then come very close to each other as well as the walls of the cylinder head which acts as obstacles when the fuel mixture flows into the cylinder. These effects had to be taken into account when designing and positioning the valves in the cylinder head.

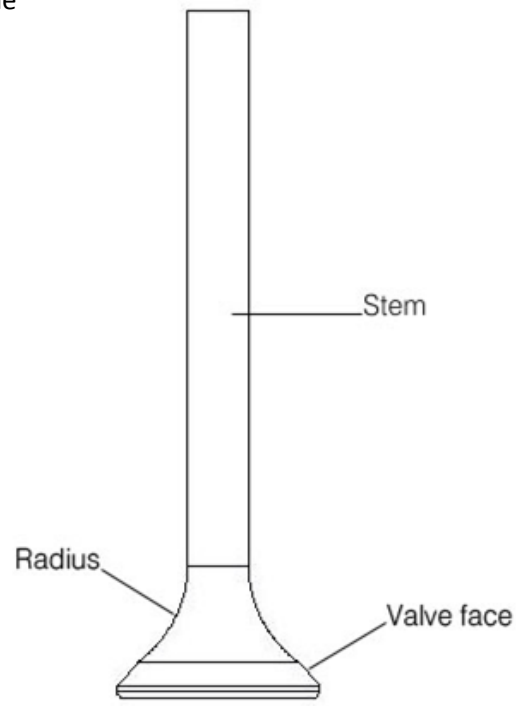

Fig. 2.5: Valve

The shape of the valve determines how much the flow of fuel mixture is slowed down as it flows along the valve. The valve radius, between the face of the valve and its stem (see fig. 2.5), is a major part of the decrease in flow, as is a poorly designed valve face. By conducting experiments and discussion with a manufacturer of valves it was concluded that a smaller radius between the stem and the disc is to prefer to a bigger one. This was later confirmed by experiments. The manufacturer argued that the principle was correct but the radius should not be constant, but larger towards the valve face so the disc becomes flatter towards the opening. The valve face is commonly a 30^0 or 45^0 chamfer. A 30^0 chamfer was traditionally used, but it later showed that a 45^0 chamfer had more over-all advantages such as a tighter seal against the seat [4].

When the valves are in motion a small mass is moved up and down a several thousand times every minute which is very energy consuming. This means that a small and light valve is desired, but also that the spring that closes the valve must not be too stiff. If the spring is too weak the valve might not get a tight enough seal against the valve seat which will result in a leakage. A series of calculations regarding the material of the spring, its free length, the thread diameter and its spring constant is required to achieve the best possible spring that is as stiff as possible without allowing leakage.

2.3 Inlet and exhaust ports

The design of the inlet and outlet ports has a direct influence on the engine performance and emission. Properly designed port geometry allows improvement of burn rate and volumetric efficiency.

The burn rate is greatly affected by how well the mixture of the fuel and air is achieved. To achieve a good mixture, turbulence is required and can be created when air is drawn into the cylinder. There are two types of turbulences that are sought after in a combustion engine. These two types are defined as swirl and tumble. Swirl is based on creation of an air vortex around the cylinder center line formed by an offset of the inlet channel to the cylinder edge (see fig. 2.6). Swirl is used to concentrate the fuel in the center of the cylinder where the ignition occurs, as the gas around the mixture only contains air or EGR. Due to the fuel properties, the fuel only ignites within a given range from rich to lean. Swirl is used to control fuel mixture within the appropriate range, thus enabling less fuel to be injected into the engine and still achieve the correct concentration of fuel and air. The swirl properties only benefit direct injection gasoline engines or diesel engines. Tumble is based on a radial airflow entering the cylinder center line (see fig. 2.6) hence creating vortexes for obtaining as homogenous mixture as possible. A homogenous mixture causes a better flame propagation, which makes it possible to create an efficient fuel mixture

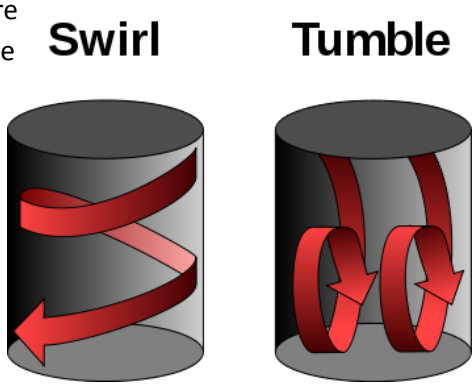

Figure. 2.6: Swirl and tumble visualization [5]

An aim of the study was to evaluate how port design parameters impact tumble and flow rate properties. It was observed that four port parameters were essential for controlling the tumble and flow rate (see fig.).[6]

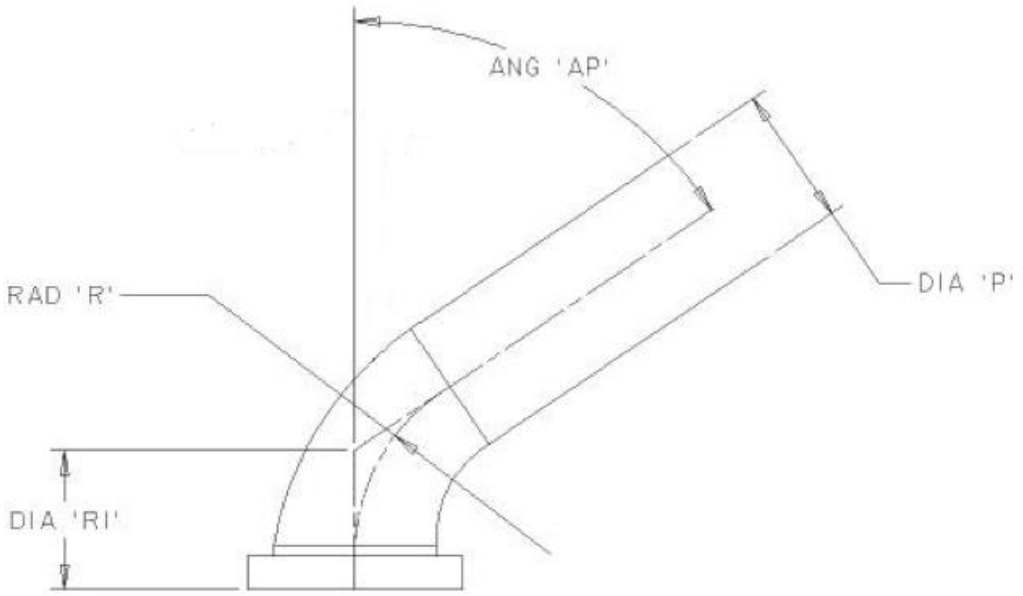

Fig. 2.7: Port parameters

P	Diameter of the inlet port
R	The radius of the line tangent to the inlet duct and valve seat centerline
RI	The height between the valve seat and the intersection of the inlet duct and valve seat centerline
AP	The angle between the valve seat and inlet centerline

Studies have shown that high levels of RI and P as well as low value of AP give rise to the flow rate. Low values of RI and R together with high values of AP provides high tumble, as an increase of P only gives a marginal change of tumble.

3. Method and application

The information gathered in the previous chapter was analyzed and compiled into what was relevant and if and how it can be applied to the project. Since it is hard to decide an optimal engine head design, the task was to create several plastic prototypes that differed in parameters such as valve placement, valve diameter and the shape of the inlet and outlet. These prototypes were designed in CAD and then printed in a rapid prototyping printer (see section 3.4) that prints physical plastic models. The models were tested at a flow analyst for comparison of the flow of air through the different prototypes. A summary of the results was made in a separate report (see section 3.5). After flow testing the prototypes were tumble tested with a specially built tumble tester for comparison of the induced tumble flow (see section 3.6). Four different prototypes were manufactured. This chapter discloses how and why different choices were made.

3.1 Combustion chamber

Since the project focuses on optimizing and maximizing the flow through the cylinder head, a four valve head design was chosen. It was decided that it was not necessary for the inlet and exhaust ports to be of the same size. Focus was put on maximizing the flow into the cylinder. The inlet valves could therefore be slightly larger than the exhaust valves. Therefore a so called “shifted pent-roof design” (see fig. 3.1) was chosen in which the inlet valves were larger than the outlet valves. The four valve design does not allow enough space for two sparkplugs. Therefore only one sparkplug was used.

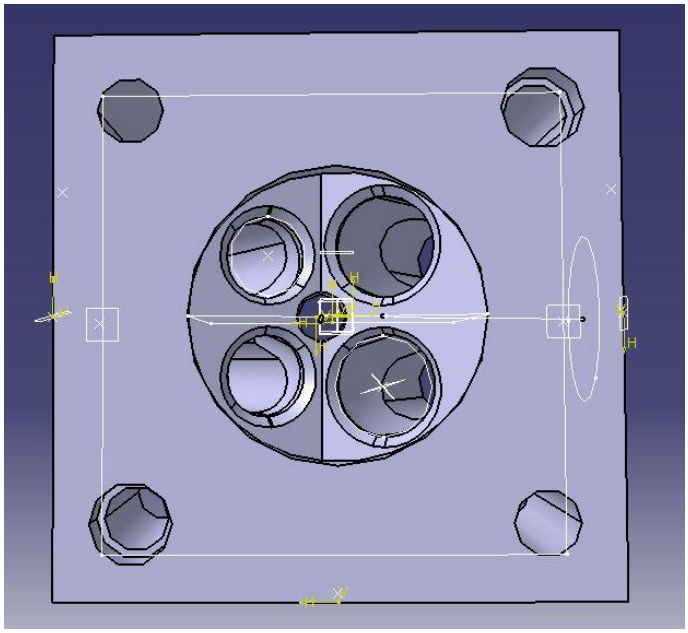

Fig. 3.1: Shifted pent-roof design

In a small engine like this, redesigns in piston and squish surface will not make any significant improvement and should therefore be avoided in order to minimize the surface area of the combustion chamber. In this case a squish redesign should only be used to compensate for the compression if it is too low when the piston is in its top dead center.

3.2 Valves

A higher flow past the valves into the cylinder is preferred according to theory. The higher flow was achieved by using four smaller valves, instead of the previous two big ones. This is because of the size of the open area available for the flow to pass through increases with the amount of valves. But as the amount of valves increases the heat losses increase as well. However, the positive effects of having more valves outweigh the heat loss at this stage. The shape of the valves were decided to have a variable radius with smaller radius towards the stem and bigger towards the face. This decision was based on a statement from a manufacturer of valves who said that a variable radius was best. The previous flow test pointed in the same direction even though the test was done on valves with a full radius. The valves were to be placed as close to the center of the cylinder as possible but not too close to each other. The reason for this was because then the flow will not hit a wall immediately after exiting the valves nor will it collide with the flow from the adjacent valve, thus inducing a higher flow.

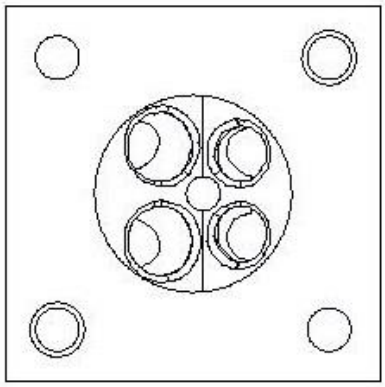

Fig. 3.2: Valve placement

3.3 Inlet and exhaust ports

To analyze the tumble and flow rate, four prototypes with different geometries were manufactured.

Rather than setting the area of the inlet port to be twice the area of the valve disc, the diameter of the inlet port ('P' in fig. 2.7) is defined by the mantle area that is obtained between the valve and the valve seat when the valve is at its maximum lift. This gives the following equation:

$$2 \cdot (2 \cdot \pi \cdot r_{valve} \cdot valvelift) = \pi \cdot r_{inlet}^2 \leftrightarrow \sqrt{4 \cdot r_{valve} \cdot valvelift} = r_{inlet}$$

With a maximum valve lift of 3.5mm, r_{valve}=6mm and P=2r_{inlet} this gives P=18mm.

Prototype 1 was made as a reference model and prototype 2 was a modified version of model 1 with increased tumble. Prototype 3 was designed to maximize the flow rate by having a smooth curve between the inlet and the valve, and a high value on RI. Prototype 4 was created as a version of prototype 1 but with smaller valves to evaluate whether this improves the flow compared to the larger valves. The outlets of the four prototypes have the same port dimension designed for optimum flow.

	Prototype 1	Prototype 2	Prototype 3	Prototype 4
R	10mm	8mm	35mm	11mm
RI	5mm	5mm	9.7mm	4.7mm
AP	50°	55°	50°	50°
r_{valve}	6mm	6mm	6mm	5mm

Table 3.1: Prototype parameters

	Prototype 1-4
R	7.5mm
RI	4.5mm
AP	37°
r_{valve}	5mm

Table 3.2: Outlet parameters

3.4 Rapid prototyping

The four prototypes were manufactured using a method called rapid prototyping. The method is based on a 3D-printer, which prints CAD-components into an acrylic plastic named Verowhiteplus**.** The material is an opaque white plastic made of caustic soda (NaOH). The printer builds up the models layer by layer which makes it possible to create very complex geometries. The printed cylinder heads were only used to get a comparable flow and turbulence measurement between the different prototypes. The flow and turbulence measurements would not expose the models to any high temperatures or stresses. This makes rapid prototyping and acrylic plastic, a cheap and suitable solution.

The cylinder heads were made as solid parts with holes for the valves and a funnel for increasing the inflow. The surface of the printed parts had a variable surface finish, which was improved by polishing the parts until a smooth and uniform surface was obtained. It was important that the different parts had an equal surface finish to achieve a reliable test result.



Fig. 3.3: The printed plastic prototypes

3.5 Flow testing

The cylinder heads were tested in a flow bench with model name Superflow SF-60. This is a professional flow bench with a capacity of 90cfm. The measure was made at 28” water gauge and the results were presented in cfm. The units are not according to the SI-system, but can easily be converted. SI- units were not chosen due to the industry standard. Each cylinder head was mounted on a cylinder dummy that was screwed on a 5mm adapter aluminum plate. Further, the adapter plate was attached to the flow bench (see fig. 3.4).

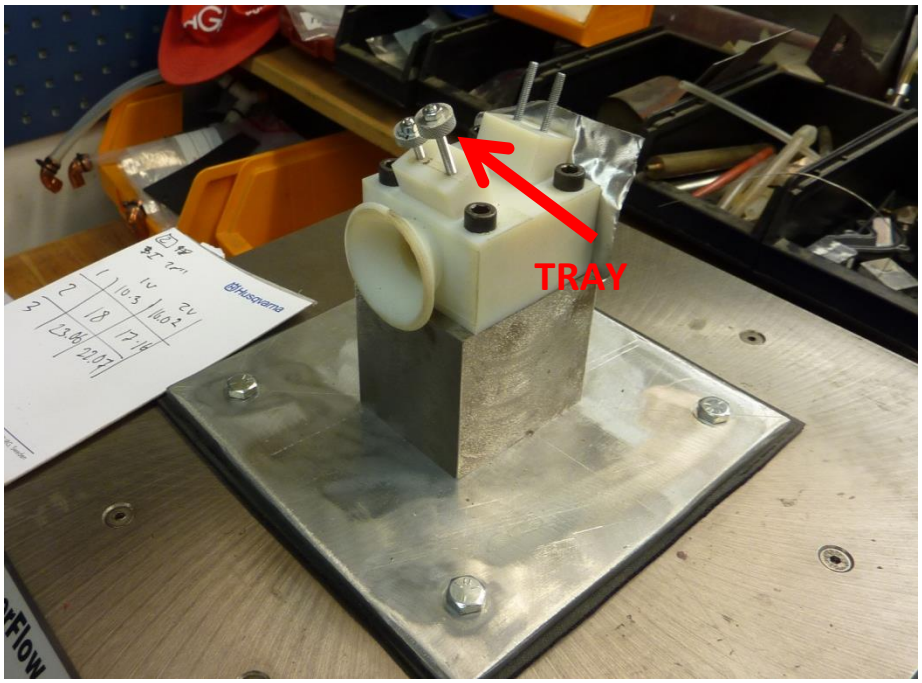

Fig. 3.4: Flow testing assembly

To evaluate the cylinder heads three different parameters were set up. These parameters are difference in pressure, flow direction and orifice range. Each cylinder head was tested with 1, 2, and 3 mm of valve lift. The valves were screwed into the cylinder head, which enables to simply unscrew the valve to get the required valve lift with a given thread pitch of 0.5mm per revolution. At the top of the valve, a tray was placed in order to facilitate the settings of the lift (see fig. 3.4).

The flow was tested with closed valves in order to identify possibly leakage before the actual flow tests. One of the cylinder heads was tested with water and was found to leak. However, no leakage was detected in the flow bench and the leakage was therefore neglected. To measure the exhaust flow the engine was reversed in the flow bench so the air was blowing out of the cylinder head instead of sucking the air in. The results of the flow test are presented in table 4.1 in section 4.

3.6 Tumble testing

Tumble means that the air entering the cylinder starts to revolve horizontally inside the cylinder thus spreading the mixture of air and fuel more efficiently and combined with the increased molecule movement resulting in a faster combustion process. To get a measurement on which of the prototypes that had the best tumble properties a test was done. In order to measure the tumble a special device was constructed which basically was a cylinder with a paddle wheel inside (see fig. 3.5).



Fig. 3.5: Tumble tester

The different cylinder heads were then attached on top of the cylinder with four screws. Air at a specified pressure flowed through the cylinder head and started to revolve inside the cylinder, the paddle wheel then started to spin due to the air motion. A speedometer was used to measure the rotation of an external trigger wheel which shared the same axle as the paddle wheel. The air was blown in to the cylinder via an adjustable nozzle. In that way the same air pressure could be maintained for the entire test and the results were comparable between the different cylinder heads (results presented in table 4.2). Cylinder heads 1, 2 and 4 were designed for different tumble rates. Cylinder head 3 was designed for higher flow which was verified in both the flow and the tumble test results.

4. Results & production

The original idea was to manufacture two different cylinder heads, one with a focus on tumble and one with a focus on maximized flow, in order to evaluate how these differ in the actual combustion process since this cannot be measured with flow or tumble testing. However the limited time space did not allow for two heads to be manufactured so the choice was made to proceed with prototype 3 with maximized flow (see table 4.1). This was the safest choice and the best alternative since it was not sure if tumble would have any significant effect on an engine this small.

	Cylinderhead	1	1	2	2	3	3	4	3
Lift (mm)	Valve	1	2	1	2	1	2	10mm	Exhaust 10mm
1		10.3	9.96	10.3	10.02	10.38	10	8.4	8.1
2		18.16	17.27	18	17.16	18.87	17.75	13.45	13.17
3		23.4	22.42	23.06	22.07	25.1	23.77	15.92	15.47

Table 4.1: Flow testing results

The sizes of the valve discs were decided after the results of the flow test (table 4.1). It showed that the larger valve size had a higher flow rate than the smaller valve size, and a high flow increased the volumetric efficiency [3]. The diameter of the inlet valves were set to 12mm. The reason for testing smaller valves (10mm) on prototype 4 was to see if there was any benefit to place the valves further away from the walls of the cylinder. No advantages were detected. The 12mm diameter ensured a high flow yet they were not too close to the walls of the cylinder or each other.

Head no.	km/h @ 3.5 bar
1	11.3
2	11
3	6.7
4	11.5

Table 4.2: Tumble test results

After the decision was taken to proceed with prototype 3 the next step was to develop the design and finalize it for manufacturing. The design needed to be adapted with consideration to existing interfaces and restrictions so that the new design could easily replace the old one. The new cylinder head still required redesign of the following parts (see fig. 4.1):

- Cam bridge (1)
- Cam rocker (2)
- Valve retainer (3)
- Valve spring (4)
- Valve (5)
- Spark plug
- Cylinder head frame

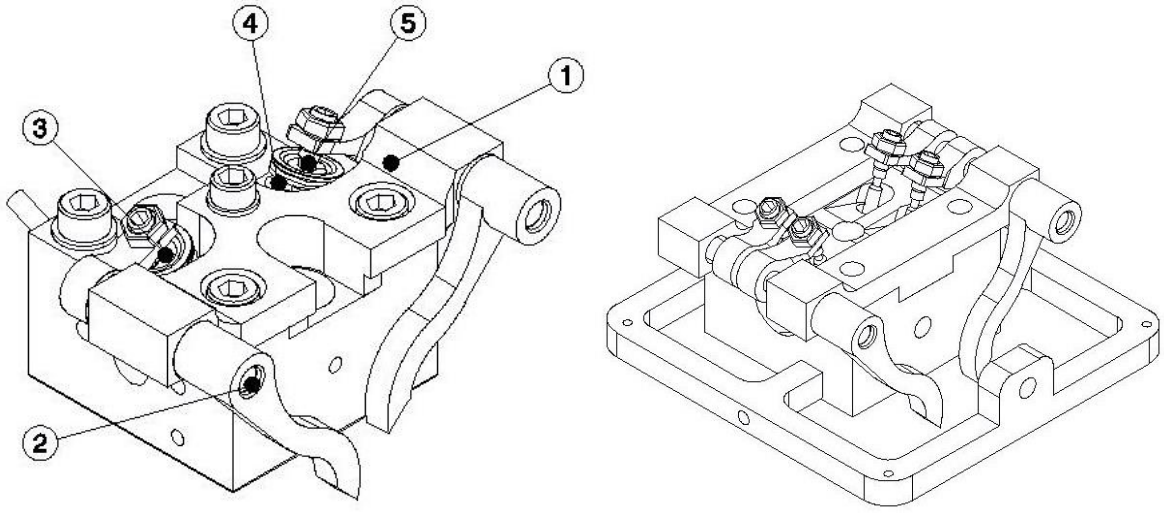

Fig. 4.1: Old cylinder head (left) and new cylinder head (right)

An objective was to manufacture as much of the design as possible in house where a variety of tools and processing machines were available such as advanced numerically controlled mills, lathes and coordinate measuring machines. The only parts not manufactured in house were the valve springs (see section 4.4). After the CAD-design of the head was complete a fixture had to be manufactured to be able to process the advanced shape of the inlet and exhaust ports of the cylinder head from various angles (see section 4.1).

4.1 Cylinder head and fixture

In order to manufacture the cylinder head with the processing machines available at the department a fixture had to be built because of the limitations of the available 3-axis CNC milling cutters. The milling cutters were old with outdated software and the complex geometries of the cylinder head required it to be processed from 10 different positions with the aid of the fixture.

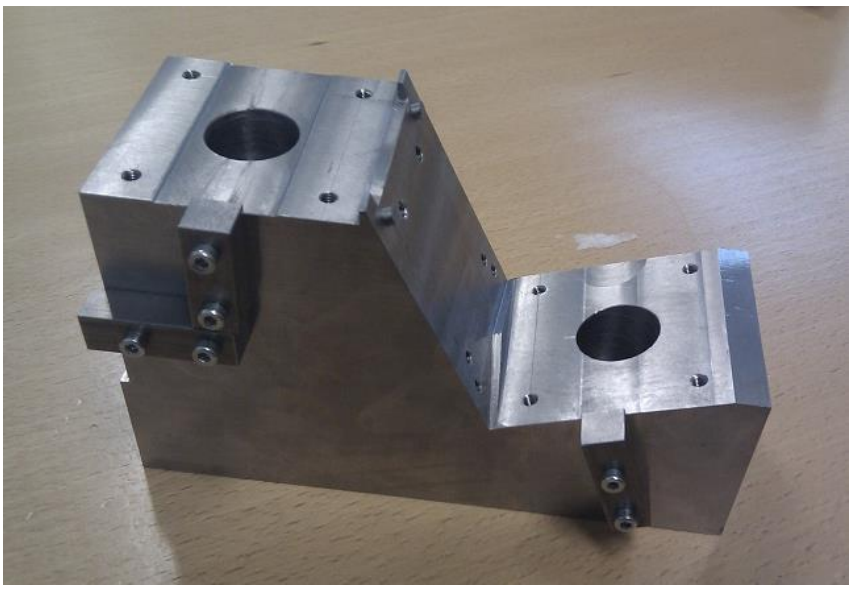

Fig. 4.2: The fixture

10 different solid CAM-assemblies were created with the CMM available at the division of applied mechanics. The CMM has a very fine spherical tolerance of 5µm. These assemblies were then imported into the CNC milling cutter and the cylinder head was processed in 10 runs. The valve holes were processed before the ports and the valve guides were then pressed into the holes and processed simultaneously with the ports so that they would not disrupt any flow unlike the valve guides of the old cylinder head (see fig. 4.3).

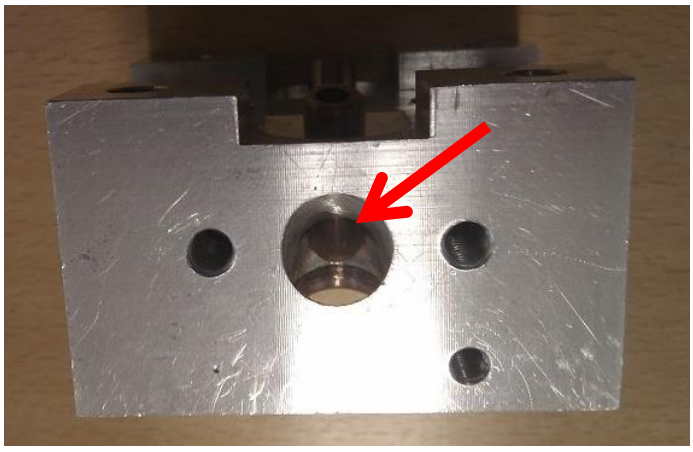

Fig. 4.3: Visible valve guide inside the port

4.2 Spark plug

The original idea was to use a stock NGK ME-8 spark plug (see fig. 4.4 (right)). Due to the limited space in the new cylinder head the spark plug would not fit. There was no smaller spark plug available on the market so the choice was to either modify the NGK spark plug that was used in the previous engine prototype or custom build spark plugs from scratch to fit the needs. Using the stock NGK spark plugs were beneficial because they had proved to work in the earlier prototype and could be bought from stores. Therefore the choice was made to modify the NGK sparkplug.



Fig. 4.4: Spark plug core (left) and original spark plug (right)

The first step in evaluating if the spark plugs could be modified to match the new dimensions needed was to examine them. To do this the stock sparkplug was stripped down to the porcelain core (see fig. 4.4 (left)). Then all components in the sparkplug were measured to figure out how much and in which way the sparkplugs could be modified. The examination led to the insight that a new way to fasten the sparkplugs to the cylinder head was needed because the surrounding aluminum shell was very thin and therefore it was not possible to make new threads in the existing shell after removing the original threads. The best way to fasten the sparkplug without using the surrounding aluminum shell was to make a socket that was to be placed on top of the sparkplug and fastened into the cylinder head. This would allow the threads to be removed from the sparkplug (see fig. 4.6) and moved further away from the combustion chamber and the surrounding ports where the available space is extremely limited (see fig. 4.5).

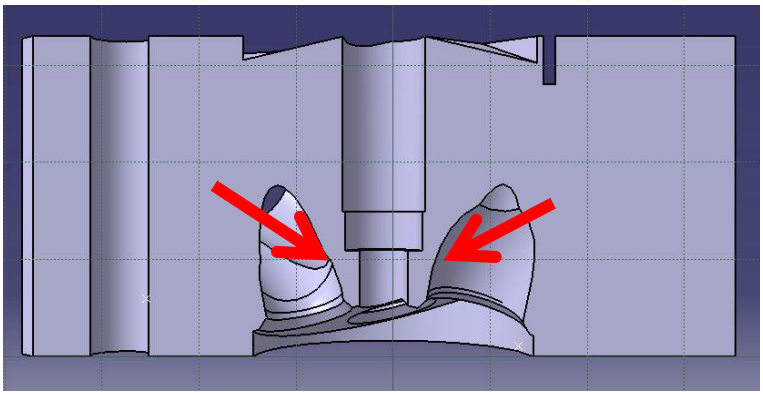

Fig. 4.5: Cross section showing the limited space for the spark plug

This solution would still cause some trouble that had to be taken into consideration. When placing a socket on top of the sparkplug the insulating distance between the electrode and the spark plug hat will decrease. When decreasing this distance the risk of a short circuit increases during ignition. Because of the risk for short circuiting, the socket would have to be as short as possible to maximize the insulation distance. This was achieved by using the biggest possible size of threads that could be fitted into the cylinder head (M 10). To fasten and loosening the new socket a custom made tool and design for fastening and loosening was needed. The easiest way seemed to be a keyway on the socket and a matching “key” on the tool (see fig. 4.7). The reason to use big threads (M 10) is that they can withstand a higher load for the equivalent distance this is because the area that joins the threads together gets larger as the diameter increases.





Fig. 4.6: Spark plug with no threads + socket **Fig. 4.7: Custom made spark plug tool + socket**

4.3 Cam bridge

The function of the cam bridge was to keep the camshaft and rocker arm shafts at its place. The engine rotates the cam shaft which pushes on the cam rockers that are fastened to the rocker arm shafts. The friction between these shafts and the cam bridge needs to be minimized.

The new design of the cylinder head required a redesign of the cam bridge since the center of the rotation has been moved and the free space on top of the head was limited due to the adoption of four valves instead of two. The possibility to use two smaller cam bridges on each side of the valves was investigated since this would also increase the stability of the camshafts. The space would according to the CAD models be enough. It was then decided to use this solution. Two cam bridges were modeled and then manufactured out of aluminum in the workshop (See fig 4.8). The work was done using cutting tools as mill and lathe. The cam bridge keeps the camshafts in place with a Polytetrafluoroethylene (Teflon) bearing. The rockers were press fitted onto the shaft.

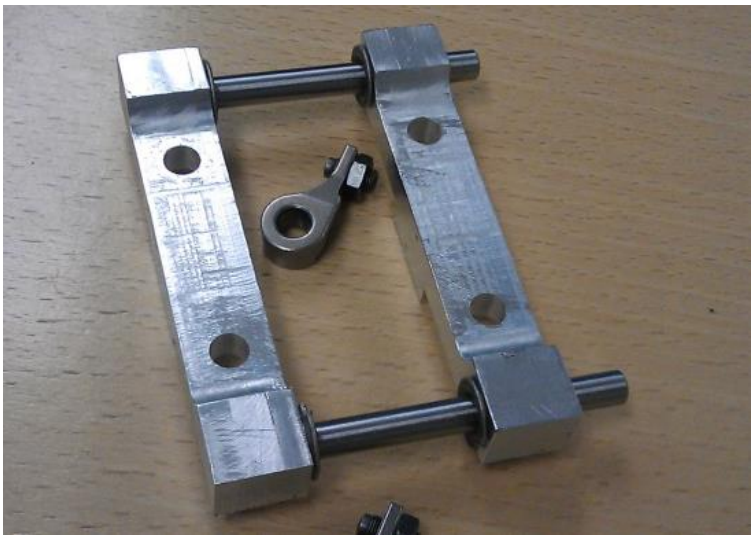

Fig. 4.8: Redesigned cam bridge

4.4 Valve springs

The valve springs had to be redesigned due to the new valve placement, size and the fact that there now were four of them. Calculations according to Swedish standard [7] resulted in a spring which met the new demands regarding available length, width and the required force to get a tight enough seal against the valve seat. These springs were made weaker than the old ones, which were too stiff even for the previous cylinder head, in order to minimize mechanical losses.

The exhaust valves were separated radially with a distance of 12mm (see fig. 4.9). They are located closer together than the intake valves thus limiting the outer radius of the springs to a maximum of 5mm.

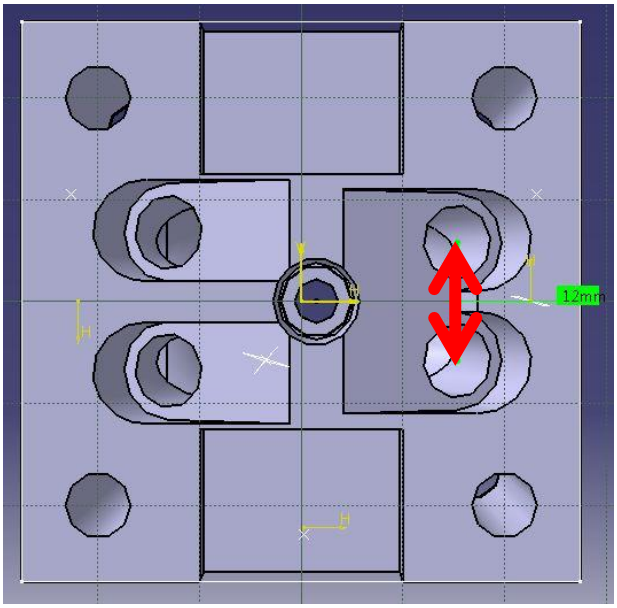

Fig. 4.9: Distance between exhaust valves

The thread diameter was set to 1mm and a Matlab program was created to calculate the rest of the spring properties and to see if they would work. The calculations were sent back and forth to a local spring manufacturer to get a spring that was good but also possible to make. A spring that fulfilled all of the demands was ordered. For more detailed information on the springs see appendix 1.



Fig. 4.10: New spring (left) and old spring (right)

5. Conclusion

The due date of this report was set to before the Eco-marathon race took place where the engine setup was first tested with the old cylinder head and then with the new one to measure the difference in fuel consumption. The plan was to test the engine with the new four valve cylinder head before the race in which case the consumption results could be disclosed in this report. However due to delays in the production this was not possible.

For further development of the cylinder head in future projects the original idea can be continued where several different cylinder heads can be created with different parameters in order to evaluate how they affect the combustion. A point of development that could not be applied to the current cylinder head due to the timeframe was the cam rocker and the surface that is in contact with the cam lobe. This area is where the majority of the mechanical losses occur and modifying the contact surface to include a bearing would minimize these losses drastically.

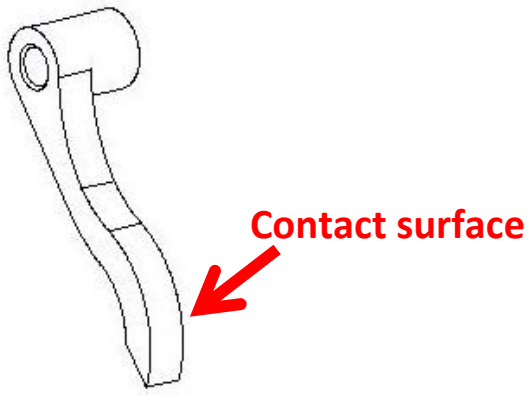

Fig. 5.1: Cam rocker

6. References

- [1] http://www.chalmers.se/am/SV/cap/chalmers-ecomarathon
- [2] http://en.wikipedia.org/wiki/Pent-roof_combustion_chamber, 2012-04-30
- [3] http://en.wikipedia.org/wiki/Volumetric_efficiency, 2012-04-30
- [4] http://theamcpages.com/engine-design-valves-intake-ports.htm
- [5] Wikipedia, Piston (mécanique), French
- [6] Blaxill H, Downing J, Seabrook J, Fry M. A Parametric Approach to Spark-Ignition Engine Inlet-Port Design. 1999.
- [7] SS-EN 13906-1

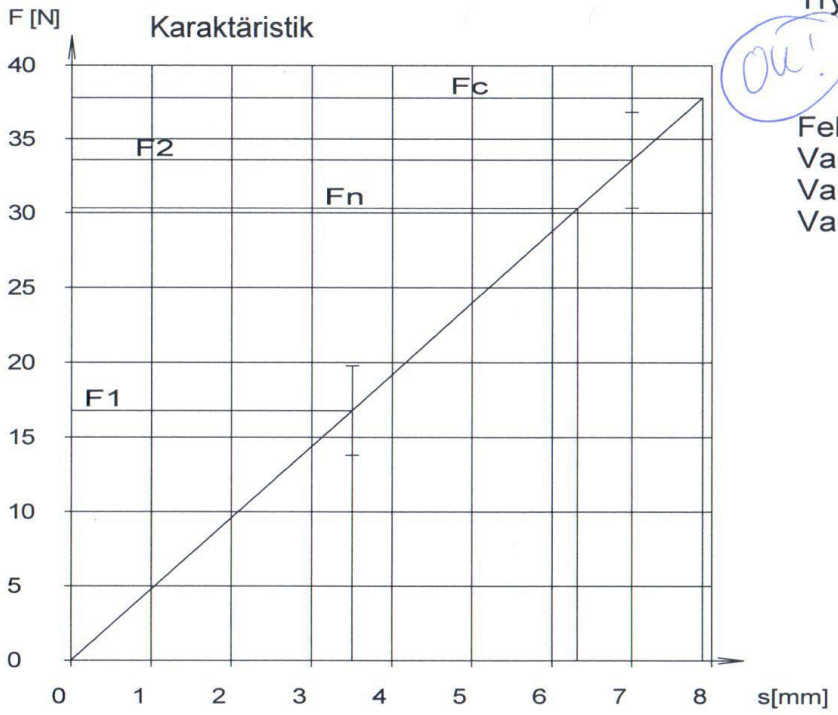

Tryckfjäder Ventilfjäder Ritn.nr: Shell Eco Marathon

OK!

Felmeddelanden !
Varning: L2<Ln ! (S=0.56)
Varning: T<T1relax (80°C)
Varning: F2 max > Fn !

R = 4.798 N/mm
d = 1 ± 0.015mm
D = 7mm
n = 6 varv
D/d = 7

L0 = 16 ± 0.57 mm
L1 = 12.5 mm
L2 = 9 mm
Ln = 9.682 mm
Lc = 8.12 mm

Di = 6 ± 0.25
De = 8mm
sh = 3.5 mm
nue = 1
nt = 8 varv
fe = 1215 Hz
k = 1.199
L = 175.9 mm
tan al.= 0.105
m = 1.085g
G= 79000 N/mm²
Rm= 2080 N/mm²
tauz= 1165 N/mm²
T = 20 °C
G20= 79000 N/mm²

s1 = 3.5 mm
s2 = 7 mm
sn = 6.319 mm
sc = 7.88 mm

F1 = 16.79 ± 3.00 N
F2 = 33.59 ± 3.25 N
Fn = 30.32 N
Fc = 37.81 N

tauk1= 359 N/mm²
tauk2= 718 N/mm²
taukh= 359 N/mm²
taun= 540 N/mm²
tauc= 674 N/mm²
tauz= 1165 N/mm²
tauhz= 564 N/mm²

EN 10270-2 VDSiCr (DIN 17223-2 VD-SiCr)
kallindad, dragen
Ändutförande : nedlagda och slipade
Belastning : dynamisk
Vald.tol. De,Di,Dm : enl. DIN 2095 toleransklass 2
Vald.tol. L0 : enl. DIN 2095 toleransklass 2
Vald.tol. F1, F2 : enl. DIN 2095 toleransklass 2
Vald.tol. e1,e2 : enl. DIN 2095 toleransklass 2
Vald.tol. d : T4 - EN10218-2

23.03.2012 12:06 - FED1+ V19.0 #0816 - Maskinfjädrar AB - C:\hexagon\FED1\Shell Eco Marathon.fed