CHALMERS

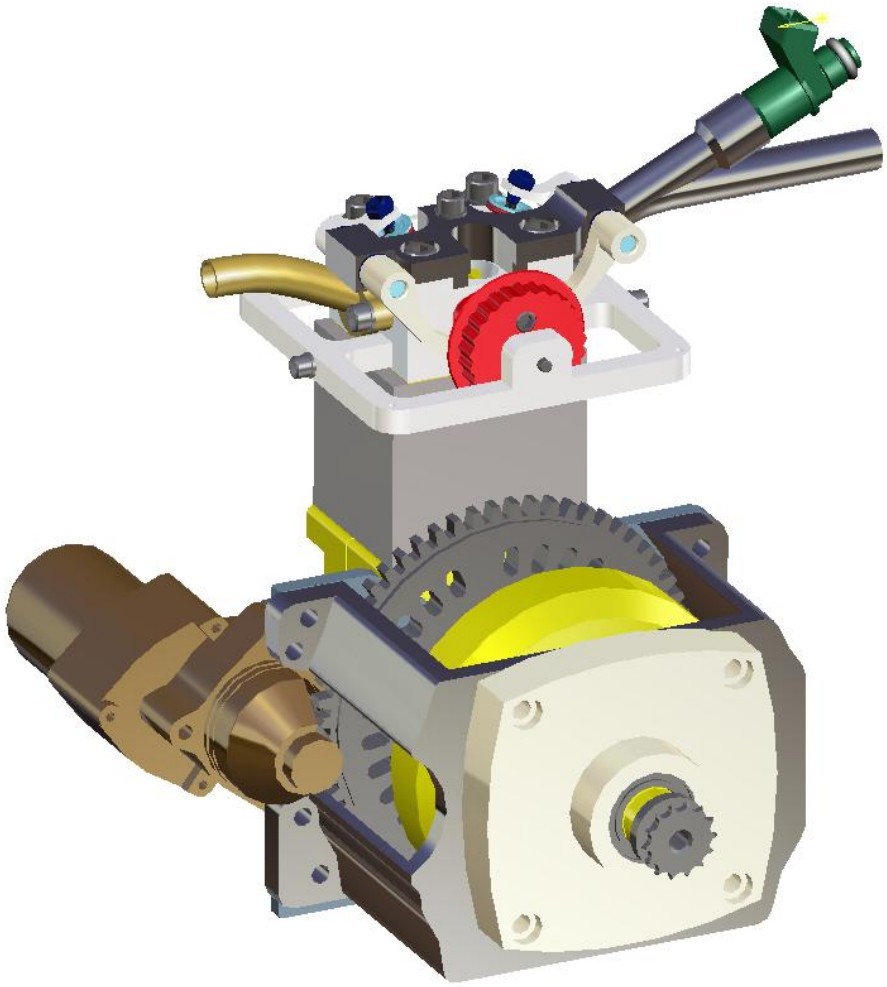

Design of a fuel efficient internal combustion engine

Anders Johansson
Andreas Thulin

Department of Applied Mechanics
Division of Combustion
CHALMERS UNIVERSITY OF TECHNOLOGY
Gothenburg, Sweden 2010

:

Design of a fuel efficient internal combustion engine

Anders Johansson
Andreas Thulin

Supervisor: Sven Andersson

Department of Applied Mechanics
Division of Combustion
CHALMERS UNIVERSITY OF TECHNOLOGY
Gothenburg, Sweden 2010

Design of a fuel efficient internal combustion engine

Anders Johansson, Andreas Thulin. 2010

© Anders Johansson, Andreas Thulin 2010

Department of Applied Mechanics
Division of Combustion
Chalmers University of Technology
SE-412 96 Göteborg
Sweden
Telephone: + 46 (0)31-772 1000

Omslag: Komplett assembly av motorn.

Göteborg, Sweden 2010

Abstract

The aim of this project was to design a modular engine during the summer 2010. The work has been carried out by two master students from the master program Automotive engineering at Chalmers University of Technology. Since the engine should act as base for future developments of a fuel efficient SI engine, main focus was to minimize the fuel consumption. This is accomplished by lowering the heat and friction losses. The time available was limited to one month hence most of the time was focused towards the construction phase. Since future students should be able to continue to develop the engine, it is important that it could be manufactured in house with the available resources at Chalmers. This requirement has resulted in compromises in the design.

Some analysis of competitors engine concept together with research studies has been conducted though to limited extent. Together with the knowledge of the authors an engine concept has been generated for further developments. To achieve the goal a four stroke Otto cycle with direct injection, 2-valve technology, dual spark plugs and with a reduced amount of moving parts was designed. All parts have been modeled in Catia V5r19 with consideration to manufacturing, assembly, function and to some extent strength. A final design was assembled, but valve timing and runner length has not been decided since lack of time. Due to the limited time, deeper analysis of material and strength analysis has been omitted.

Sammanfattning

Syftet med projektet var att under sommaren 2010 konstruera en motor som är uppbyggd som ett modulsystem. Arbetet har utförts av två studenter från Chalmers tekniska högskola vid masterprogrammet Automotive Engineering. Då motorn skall agera grund för framtida utveckling av en bränsleeffektiv förbränningsmotor, låg även fokus på att minimera den specifika bränsleförbrukningen. Detta genomfördes genom att fokusera på de värme- och friktionsförluster som uppkommer under drift. Tiden för projektet var begränsad till en månad. Därför fokuserades huvuddelen av all tid på konstruktionsfasen. Motorn skall vara möjlig att vidareutveckla av studenter och därför är det viktigt att motorn designas utifrån att den kan tillverkas i befintliga maskiner i Chalmers verkstadsresurser. Detta krav har lett till att vissa kompromisser i designen har fått göras.

Studier av konkurrenters motorkoncept tillsammans med forskningsstudier har dock analyserats i begränsat omfång för att uppnå en högre bränsleeffektivitet. Tillsammans med konstruktörernas kunskap har ett motorkoncept genererats vilket har legat till grunden för utvecklingen. En 4-takts ottocykel med portinsprutning, 2-ventilsteknik, dubbla tändstift och med minskat antal rörliga komponenter och lagringar har konstruerats för att försöka uppnå målen. Alla delar har modellerats i Catia V5r19 med avseende på tillverkningsteknik, montering, funktion och till viss del hållfasthet.

En färdig modell av en motor är framtagen, dock har inga ventiltider eller dimensioner på gasväxlingssystem framtagits på grund av tidsbrist. Detta har även lett till att materialval, hållfasthetsberäkningar och djupare analyser har utelämnats eftersom detta innebär en ökad arbetsbelastning vilket inte har rymts i tidsplanen.

Content

ABSTRACT II

NOMENCLATURE 1

1. INTRODUCTION 1

1.1 BACKGROUND 1
1.2 OBJECTIVE 1
1.3 CONTIGUOUSNESS 2

2 ENGINE CHARACTERISTICS 3

2.1 OPERATING CYCLE 3
2.2 GEOMETRIC RELATION 3
2.2.1 Compression ratio 3
2.2.2 Stroke to bore ratio 3
2.2.3 Connecting rod to stroke ratio 3
2.3 CYLINDER HEAD 4
2.3.1 Combustion chamber 4
2.3.2 Cylinder head ports 4
2.3.3 Dual spark plugs 4
2.3.4 Port injection 5
2.3.5 Valve cover 5
2.3.6 Valve train 5
2.4 CYLINDER 5
2.5 PISTON 6
2.6 CRANKSHAFT 6
2.7 CONNECTING ROD 7
2.8 TRIGGER WHEEL, FLYWHEEL, STARTER WHEEL AND CLUTCH 7
2.9 CRANK HOUSE 8

3 METHOD 9

3.1 SOFTWARE 9
3.2 MATERIAL AND MANUFACTURING ASPECTS 9

4 RESULTS 11

4.1 ENGINE SPECIFICATIONS 11
4.2 CYLINDER HEAD 12
4.3 VALVE TRAIN 13
4.4 CYLINDER HEAD ASSEMBLY 13
4.5 CRANKSHAFT 15
4.6 CONNECTING ROD 15
4.7 PISTON 16
4.8 CRANK HOUSE 17
4.9 CYLINDER 18
4.10 CLUTCH ASSEMBLY 19
4.11 COMPLETE ENGINE ASSEMBLY 20

5 DISCUSSION 23

6 CONCLUSIONS 25

7 REFERENCES 27

Preface

This report summarizes a project carried out during summer 2010 at Chalmers University of Technology at the department of Applied mechanics, division of combustion. The objectives of the project were to carry out a design of a modular engine constructed at Chalmers, which could be used for education in the future.

We want to thank our supervisor associate professor Sven Andersson for guidance during the project. We also want to thank Jan Bragée and Nils Nilsson in the prototype workshop for their contributions of their knowledge and help during the construction of the engine. Their equipment made it possible to finalize the work.

Nomenclature

BDC = bottom dead center

BSFC = brake specific fuel consumption

CAD = computer aided design

CAM = computer aided manufacturing

FMEP = friction mean effective pressure

ISFC = indicated specific fuel consumption

NC = numerical control

SI = spark ignition

TDC = top dead center

VE = volumetric efficiency

1. Introduction

This report describes the process which generated the first design of the spark ignition combustion engine created for the vehicle used by Chalmers in Shell Eco Marathon. The project was conducted by two students from the Automotive Engineering master program.

1.1 Background

This project was conducted during the summer 2010 to create a modular engine for further development of an engine suited for the Shell Eco Marathon competition. Universities all over Europe compete with their developed vehicles to obtain as low fuel consumption as possible. Chalmers compete with two vehicles in different classes with the target to achieve the longest distance of one liter gasoline or an equal amount of fuel.

The internal combustion vehicle (Eco Vera) has in present time achieved a record of 1243km for one liter of gasoline. The engine used until today is a Honda GX35 with a specific fuel consumption of 333 g/kWh. The engine is constructed to be built into chainsaws, blowers and similar applications. The lifecycle is about 150 hours and the efficiency is comparatively low. Several attempts have been carried out to improve the efficiency, conversion to port injection, electronically controlled ignition and increased compression ratio among many other improvements. The efficiency of the engine has been stated to be close to the maximum and further improvements are small, hence a new engine is needed for further improvement.

1.2 Objective

The objective of this report is to present the process throughout the design of the engine. The project was initiated to develop a modular engine which could be a base for further development. Since future students should be able to improve, test and continue with the design it should be constructed with the resources available at Chalmers. Since the engine is intended as a development project it is important to document information to ensure that future students will have the possibility to understand the design process of the engine.

The following questions have been considered during the design phase.

- Is the design possible to manufacture with resources at Chalmers?
- Which compromises does this kind of design imply?
- Which obvious potential development has the design?
- How could the design be different?

The first question is very important from an educational point of view. A design not intended to be fabricated yourself could lead to less consideration during the design phase, in worst case it could result in that it will be unable to manufacture. If the requirement is stated from the beginning the designer is more aware of the manufacturing process and an increased knowledge is achieved. The second benefit results in further developments are made possible since the constructions can be manufactured in house. The first question is related to the second since the machines at Chalmers are limited in a manufacturing point of view. Complex geometries are hard to achieve and some constructions are not possible at all. Therefore knowledge about the manufacturing capabilities is crucial. The third and fourth question coincides to some extent since lack of time and knowledge affects. For some part suggestions for improvements are explained and why they are not implemented at present.

1.3 Contiguousness

The project was limited to one month which lead to certain contiguousness was necessary to fulfill the objectives. During the design phase a certain level of research has been conducted but not deep enough to obtain the best result. The focus has instead been towards designing a modular engine which could be improved piece by piece in the future. Many of the sub assemblies have therefore been designed in an engineering point of view, based on our knowledge and some level of research. For this reason there are numerous of improvements possible in each segment such as gas exchange, friction, heat transfer and combustion. A majority of the engines produced today are designed with respect to many aspects and regulations. The engine developed during this project has mainly two requirements regarding the design.

- Achieve as low brake specific fuel consumption (BSFC) as possible.
- Be able to manufacture at Chalmers, with the existing machines.

Due to this, properties like emissions, drivability and vibrations had low priority and were not considered. Since the engine should be mounted in Eco Vera it has to be limited to overall size and the attachment points towards the body.

Since the lead time of spare parts are important and the time available for construction is limited, many parts from the Honda Gx35 will be reused.

2 Engine characteristics

2.1 Operating cycle

Most of the top competitor teams seem to operate the engine in an Atkinson cycle based on our investigation according to their valve timing. The Atkinson cycle is similar to the Otto cycle but closes the intake valve later during the compression stroke. Thereby it reduces the pumping losses during the compression stroke, though the power output is reduced. Even though increased efficiency can be achieved, especially at low compression ratios [1], an Otto cycle is chosen. The only reason for this is to change to Atkinson cycle after the engine has been built and thereafter perform experiments to investigate the possible benefits of the Atkinson cycle in regard to BSFC.

2.2 Geometric relation

Different geometric relations have showed to influence heat transfer and friction and are analyzed further in this chapter.

2.2.1 Compression ratio

Ideal analysis shows increasing the compression ratio improves the thermal efficiency [1]. As the compression ratio increase, the surface to volume ratio increase, hence the heat transfer is increased. Increasing compression ratio will also increase the friction due to increased pressure applied on piston and piston rings. Even though the friction losses and heat transfer increase, thermal efficiency is limited also due to knock. The maximum compression ratio is then dependent on load, speed, temperature, valve timing etc, hence it is hard to analytically determine. The valve timing will determine the actual dynamic compression ratio which is of more interest. Therefore a compression ratio of 11:1 was chosen based on other engines with high efficiency and to ensure a close to MBT timing could be achieved without knocking.

2.2.2 Stroke to bore ratio

Studies have showed a stroke to bore ratio of 1.3 compared to lower ratios showed a decreased ISFC due to decreased heat losses [2], though an increased stroke to bore ratio increases friction losses. The friction losses increases with higher stroke to bore ratio and increases also with engine speed [3]. The increased friction can be explained to the forces acting between the piston and cylinder wall increases. Another aspect to consider is that the bore has to be large enough to allow clearances for valves and sparkplugs which could be a problem with small bores. The competitors turned out, according to our studies, to run a rather varied stroke to bore ratio. The top teams showed approximately a ratio of 1-2. Since no studies were found directly related to the BSFC, only regarding ISFC and FMEP, conclusions had to be made from an engineering point of view. Since low friction could be achieved in the engine with other means a stroke to bore ratio of 1.4 should lower the heat losses and thereby a good compromise could be achieved.

2.2.3 Connecting rod to stroke ratio

The connecting rod length to stroke ratio influences engine friction and the piston velocity which in case affects the BSFC. A long connecting rod reduces the engine friction since the side force of the piston will decrease. It will also move the piston slower at TDC and thereby increase the time for combustion which in theory should improve thermal efficiency. Studies showed an increased heat transfer and that there was no gain in thermal efficiency using a higher ratio [4]. A long rod will also increase the total height of the engine and thereby increase the total mass. The lack of information lead

to a choice of connecting rod to stroke ratio was decided to 1.75. Consideration was also made since a shorter ratio would give some packaging problem due to piston to crankshaft clearance in BDC.

2.3 Cylinder head

The cylinder head can be divided into combustion chamber, intake port and exhaust port. Each of these areas influences the engine operating characteristics and determines the fuel efficiency.

A square cylinder head made of Alumec was chosen due to light weight and consideration to manufacturing process. Since the valve seats is chosen to be milled into the chamber a strong material is needed to prevent wear with time. Traditionally valve seats of high strength steel alloy are used and press fitted to the head but lack of space and precision machines resulted in valve seats milled directly into the cylinder head. The choice of milling the seats directly into the cylinder head saves space and makes it possible to increase the size of the valves which is advantageous.

2.3.1 Combustion chamber

The shape of the combustion chamber determines the flame speed, knock level and heat transfer. A fast combustion without knocking and low heat transfer is desirable to achieve low BSFC. Therefore an open shaped combustion chamber has been chosen which ensures a fast burn rate and increased tumble [1]. The total heat loses are highly dependent on surface to volume ratio and in cylinder gas velocities. An open and hemispherical chamber has proved to have the lowest heat losses as a fraction of the fuels energy [1], which could possibly be explained by the combustion chamber is shaped as a sphere. Although one has also to consider a certain compression ratio has to be obtained which yields a certain combustion volume has to exist. The benefit with an open shaped combustion chamber also allows larger valves to be fitted since they can be mounted in an inclined angle.

2.3.2 Cylinder head ports

The geometry of the intake and exhaust ports together with the valves, runners and valve timing are some of the factors determining the VE. Opening and closing of the valves causes pressure pulses travelling at speed of sound back and forth between the manifold and valves. A larger diameter will weaken the pulses and thereby decrease the VE at lower engine speeds. If the pipe diameter is too small there is a risk of restricting the air flow and thereby choking the airflow. The length of the port together with the length of the runner will then determine which engine speed the pulses will be tuned to and thereby an increased VE can be achieved in a desired engine speed span. The shape of the ports will also determine the tumble effect used in the cylinder. An appropriate amount of tumble is desirable to achieve a good mixture of the gas composition, though too much tumble will increase the heat transfer.

The intake and exhaust ports are dimensioned in an engineering point of view. Since they had to be made in a 3-axis mill the shape of them was designed to improve tumble effect and at the same time it should be possible to manufacture them. The areas of the Honda GX 35 ports were used as a reference and various modern engine ports were analyzed to come up to a compromise.

2.3.3 Dual spark plugs

The use of dual spark plugs separated in the combustion chamber ignited simultaneously has been proved to increase the effective flame area substantially and increases the initial mixture burning rate [1]. As can be anticipated this will decrease the burn duration, prevent knocking and lead to a more stable combustion, therefore dual spark plugs will be implemented into the combustion chamber. The main issue with dual spark plugs is the available space. To overcome this problem the smallest spark plugs on the market will be used.

2.3.4 Port injection

Traditionally port injection has been used widely in 4-stroke engines to control mixture composition. Lately manufactures have been producing direct injection SI engine where the injector is mounted directly in the cylinder. The benefits has showed to be better fuel efficiency and increased VE. The possibility to operate in stratified mode results in less heat- and pumping losses. The drawback though is that it is a complex system which requires high fuel pressure, expensive injectors, precision positioned injectors and free space to mount the injector. Since the dimensions of the engine are very small an injector mounted in the cylinder has not been possible since the bore is small. Therefore it has been chosen to use port injection due to the difficulties to accomplish a direct injection system. An injector will therefore be mounted in the intake runner to accomplish a desirable air to fuel ratio.

2.3.5 Valve cover

The valve cover is made of aluminum and its function is mainly to prevent dirt from contact with the valve train. In this design the valve cover is divided into the cover and a support frame which is attached to the cylinder head and also positions the shaft for the camshaft. It will also act as isolation to prevent heat transfer and due to its shape it will allow better possibilities to isolate the cylinder head.

2.3.6 Valve train

The most common engines use four-valve techniques today. Four-valve system can utilize more of the surface area in the combustion chamber, and thereby increase VE. The four-valve system is more complex than a two-valve system and requires approximately the double amount of valve train components which could be a packaging problem for small engines. Since maximum power output has not been priority, a 2-valve design was chosen to reduce the complexity and to make room for dual spark plugs. Since it also implies a reduced number of moving parts the friction losses is reduced as well. A single camshaft with separate lobe for intake and exhaust valve was decided for simplicity and reduces friction compared to dual individual camshafts. The valve motion is transferred via a rocker arm as in the Honda engine since a direct acting camshaft could not be fitted due to lack of space and due to manufacturing restrictions.

The valves were chosen to be mounted in an inclined angle to allow larger valves to be fitted into the combustion chamber and make the contact with the chamber surface smoother. The camshaft is of the same design as Honda Gx35 engine with a pulley and cam lobe, but with the difference of one cam lobe profile for each valve. This option enables more control over valve timing which is essential for improving VE and thereby BSFC. To connect the new camshaft with the existing valve rocker arm and shaft a new cam rocker arm is implemented to be able to setup the system. The rocker arms are mounted in a bridge which is mounted on top of the cylinder head and locks the valve rocker mechanism into one rotational degree of freedom.

2.4 Cylinder

The main purpose of the cylinder is to create a volume where the piston can move up and down. Since the piston rings are in contact with the cylinder a small amount of friction is formed when the piston moves. The cylinder chosen for this design is made of two parts, cylinder base and liner. The cylinder base is made of aluminum to be as light as possible since the total volume is rather large. To simplify possibilities to cool or heat the cylinder it is made rectangular to make it easy to attach cooling blocks on each of the four sides in future development. The interface to crank house consists of four threads with one aligning pin. To position the cylinder head towards the cylinder it is attached with threads and two aligning pins. Since this engine is an experimental engine a series of test with different liner

will be conducted in the future. Therefore it is convenient to split the linear and thereby simplify changes in linear material for later tests. The liner is made of cast iron and has a press fit toward the cylinder base. To achieve low friction the liner has a fine surface but is honed to ensure the oil film is present at the cylinder walls.

2.5 Piston

The piston in the engine is exposed to gas forces during combustion and translates the forces through the connecting rod down to the crankshaft. A certain play between the piston and cylinder wall has to exist and therefore piston rings are used to seal the piston towards the combustion chamber. A piston usually has a top, a second and an oil ring which all contributes to friction losses.

The piston designed is made of Alumec due to the high forces during combustion. The cylinder to piston clearance is chosen to be the same as Honda Gx35. At the ring land the clearance is larger since this area is exposed to hot gases and the material is thermally expanded. A volume is subtracted in the piston top to obtain an increased tumble near TDC and to achieve a correct compression ratio. A single piston ring is chosen to minimize friction and no oil rings are implemented, hence the blow down will increase but hopefully the decreased friction is larger than the blow by losses.

Small channels under the piston skirt are drilled to the piston pin to maintain lubrication from the oil mist. Material is removed from the side skirt perpendicular to the piston pin to decrease friction and mass. Since the maximum valve lift is rather small and due to the piston top volume, no valve pockets are needed, which minimize the risk for hotspots and thereby knocking.

2.6 Crankshaft

There are basically two types of crankshafts today, split and solid. The solid crankshaft is common in multiple cylinder engines and is manufactured in one piece. This means that the connecting rod has to be divided in two parts in the big end in order to mount it towards the crankshaft. The second type admits use of less material since the connecting rod is manufactured in one piece. This means that the crankshaft has to be separated when the connecting rod is mounted. This type is mostly used in engines where low rotational mass is preferred. The divided crankshaft consists of three parts, two crankshaft halves and one connecting pin which is press fit mounted in the two halves.

The crankshaft should be constructed to reduce the amount of seals in the crank house. A seal is the origin of friction losses which are to be held to a minimum. Because of this the crankshaft should only have one outgoing shaft. This construction reduces the number of seals to one which would then be mounted at the outer part of the bearing at the outgoing shaft. Since the bearings are open inside the crank house, the lubrication of the crank house assures lubrication of the bearings as well.

One critical factor is the length of the outgoing shaft. The output shaft has to be quite long since all necessary support functions and power transfer has to be on the same shaft. The length of the shaft could be a problem due to the relatively large mass of the clutch which is mounted on the outermost part of the shaft. Alumec was used as material of construction in order to keep the rotational mass as low as possible. If Alumec proves not to be strong enough there is a possibility to change material to steel.

When the crankshaft is designed, special attention has to be paid to the counter weights. The purposes of these are to reduce the powerful acceleration changes caused at every ignition and to store energy for the rotating motion when the engine does not perform work. A single cylinder engine is hard to balance and vibrations will occur which might cause fatigue fractures. When the engine was designed

small attention was paid to the counterweights. A suggestion in further development work would therefore be to evaluate the design of the counterweights with respect to energy efficiency and vibrations.

2.7 Connecting rod

The connecting rod is manufactured in one piece with a bearing in the big end and press fit for the piston pin in the small end. When designing the rod, some dimensions from the original rod were used. Since the pressure trace or maximum cylinder pressure was unknown the forces acting on the rod was not calculated. The critical point of the connecting rod is the thinnest part just beneath the small end. The cross section area of the rod might be under dimensioned. A suggestion for further development work is to make a FEM analysis of the rod in order to analyze where to cut or add material.

The rod is manufactured in Alumec in order to reduce the weight. The original rod was manufactured in steel and is probably designed to avoid fatigue fracture. The Vera engine must not avoid fatigue fracture, it only has to last for the competition and can thereafter be replaced. Because of this some degree of fatigue is accepted.

The length of the rod was chosen with respect to the following factors:

- Clearance towards the counterweights at BDC.
- The amount of material in the piston beneath the piston pin.
- The acceleration at TDC.
- The forces acting at the bearings in the big end.

The first two factors affect the minimum length of the rod. A decreased amount of material below the piston pin shortens the rod and the clearance is directly affected by the length of the rod. The amount of material below the pin must be dimensioned to avoid fracture and cannot be set to low. The third factor is the influence of the acceleration at TDC. A longer rod results in lower stresses at the rod bearings since the angles of the rod are less sharp. Higher stresses results in increased friction losses which is disadvantageous. A shorter rod on the other hand increases the acceleration at TDC as well as at BDC. The increased acceleration at TDC reduces the time available for the knocking phenomena to occur [1]. This renders possibilities to advance the ignition timing and thereby increasing the efficiency. The increased acceleration at BDC is an advantage for the emptying of exhaust gases when the combustion stroke has been performed. Based on the above theories the resulting rod length is therefore a balance between bearing stresses, available space and piston acceleration at end points.

2.8 Trigger wheel, flywheel, starter wheel and clutch

Since the engine is designed to reduce friction losses only one outgoing shaft is available to mount the necessary support functions such as trigger wheels, flywheels and clutch. The construction must be kept as compact as possible since this affects the length of the shaft. A long shaft would be subject to large bending forces since the clutch has to be mounted at the end of the shaft.

A trigger wheel is normally designed with teeth on the circumference which are measured by a trigger sensor during rotation. A more compact design would be to integrate the starter wheel, trigger wheel and flywheel in one unit. This can be made by mounting the starter gear on the circumference and the trigger wheel on the face of the wheel. The rest of the wheel acts as a flywheel. After the trigger wheel a timing pulley is mounted for the timing belt and thereafter the clutch is mounted.

Since the engine only will operate in short intervals an electric starter will be used. The only purpose of the starter engine is to crank the engine until ignition occurs and combustion takes place. An electrical starter with minimal weight which disengages after the engine is started is chosen to be implemented into the design. Compared to the modified starter present at Honda Gx35 which always has mechanical contact, friction losses is removed in this design.

2.9 Crank house

There are mainly two types of crank houses for small single cylinder engines, one split in the horizontal direction and one split in vertical direction. A crank house split in vertical direction is probably due to the manufacturing aspect. If the house would have been split in horizontal direction the bearing houses had to be line honed to maintain tolerances and to have the bearings in line. The design with a vertical split makes it possible to manufacture the crank house in a three axis mill.

The crank house must not only work as housing for the crankshaft but also provide mountings for the support functions and engine brackets. Besides this, the crank house must be designed to provide lubrication inside the cylinder in cooperation with the crankshaft. The most common design today uses the counterweights to stir the oil in the oil pan, which creates an oil mist pitched onto the cylinder walls and surrounding volumes in direct connection with the crank house.

3 Method

After the engine concept had been decided a broad work began modeling the engine in CAD. The following section describes the software and process used to design the engine.

3.1 Software

All CAD models have been created with Dassault Systemes Catia V5R19. During the work problems occurred with converting models created in different versions of Catia. A decision was made that all models should be designed in the above mentioned release of Catia to avoid further problems. It would be an advantage if future designs would be made in the same release of Catia to make it easier to modify the assembly.

The preparation work made for NC-milling was made in DelcCam FeatureCam 2009. This program has turned out to be compatible with the solid models created in Catia. The import function of solids from Catia is important since many parts consist of geometries hard to manufacture in a manual mill or lathe. In some cases a special solid had to be divided in two parts with only a selection of geometries from the complete solid. This was made in cases where 3D-milling complicated the NC-preparation. One example is the combustion chamber of the cylinder head. FeatureCam wanted to 3D-mill not only the combustion chamber but also the holes for the bolts. This problem was solved by dividing the solid in two parts, one consisting of only the combustion chamber and the other of the screw holes.

3.2 Material and manufacturing aspects

The choice of material copes with both economy and manufacturability. In order to facilitate the choice, only three materials has been used in the engine design, Alumec, Impax Supreme and 6062 aluminum alloy. The former two of these materials are marketed by Uddeholm AB. Alumec is an aluminum alloy and Impax Supreme is a steel alloy with high hardness. Alumec was chosen due to the low weight in relation to the high strength. Impax Supreme was chosen due to its high hardness and ability to be machined with regular tools without post hardening. 6062 alloy was chosen for parts where the high strength was not necessary such as the crank house, valve train bridge etc. Impax supreme has only been used for the rocker arms, and camshaft lobes which are subject to high load and has to be highly wear resistant.

From the origin Honda engine the following components have been recycled due to difficulties in manufacturing these components at Chalmers. The materials used in these components are unknown.

- Valve rocker arms
- Valves, valve guides, valve springs and retainers
- Piston- and rod pins
- Starter wheel
- Clutch assembly

During the design process care has been taken to facilitate manufacturing of parts with conventional workshop resources available at Chalmers. These resources include machines such as conventionally manual or NC-controlled mills and manual lathe. Main part of the milling work was carried out in a 3-axis NC-controlled mill.

4 Results

4.1 Engine specifications

Table 1, Engine specifications.

Parameter	Value	Unit
Displacement	26,2	cc
Cylinder	1	-
Stroke	40	mm
Bore	29	mm
Connecting rod length	70	mm
Compression ratio	11: 1	-
Valves	2	-
Intake valve diameter	13	mm
Exhaust valve diameter	12	mm
Port diameter	10	mm
Valve angle	20	degrees
Sparkplugs	Dual sparkplugs	-
Sparkplug angle	20	degrees
Fuel injection	Port injection	-
Operation cycle	Otto-cycle	-
Valve train	Single camshaft	-
Fuel	Gasoline	-

4.2 Cylinder head

The cylinder head is 55 mm wide, 55 mm deep with a height of 37.5 mm made of Alumec. Attachment threads for valve cover, intake and exhaust runner and alve rocker bridge can be seen in Figure 1. Iteration during design phase was performed to allow sufficient clearance between valves, sparkplug and ports. Dowel pockets are implemented in two of the bolt holes to guide the head correctly against the cylinder. As can be noticed a lot of material surrounds the combustion chamber, however the possibility to increase the bore is the main reason of this. The sparkplugs are placed in center line in offset to each other to minimize the distance travelled of the end gases and thereby minimize knock and the effective flame area. The minimum clearance of the material has been analyzed to approximately 2 mm between the ports and pockets for the valve springs. From Figure 1, the entrance hole from the cylinder pressure gage can be noticed which is mounted from backside of the head, which can be used to determine mass fraction burned. The main issues during the design were packaging problem and sufficient clearance for all parts. Some concerns regarding the valve seats sealing capability exists since the choice of Alumec is uncertain.

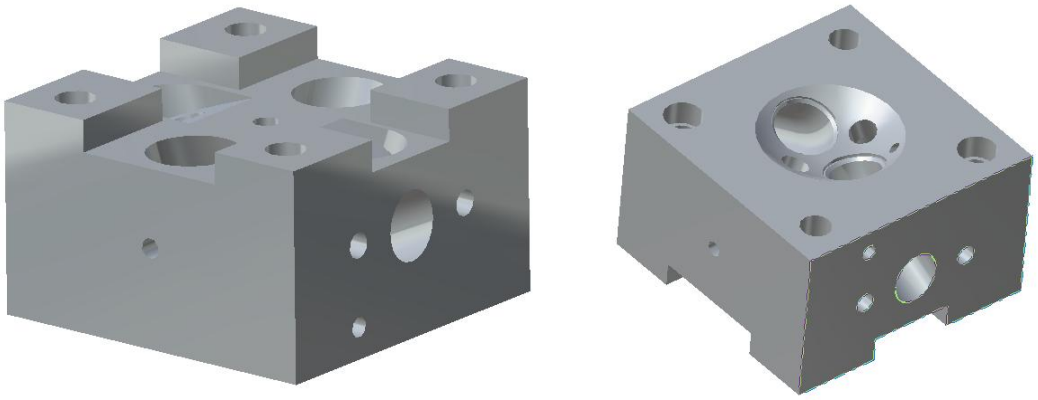

Figure 1, Cylinder head showed from above and below.

Figure 2 shows the intake and exhaust port in a split view. The entry diameter is 10mm at both channels until the radius near valve seats. The port diameter expands then towards a diameter of 12mm at the valve seat. The valve guide is positioned in a 20 degree inclined angle, the ports have an incoming angle of 25 degrees and the spark plugs are positioned in an angle of 20 degrees. The valve seats are positioned as high as possible to ensure sufficient valve to piston clearance is reached.

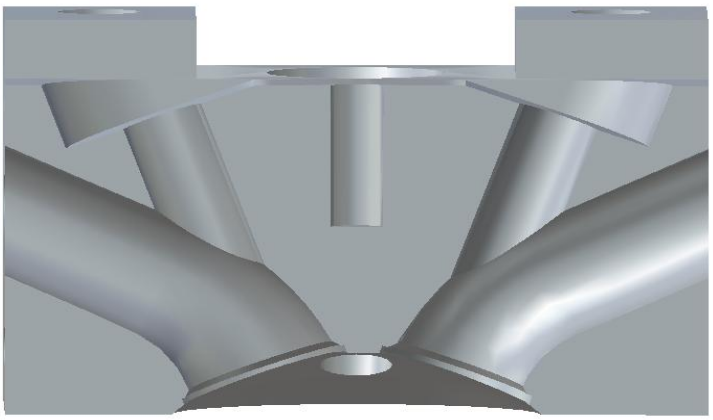

Figure 2, Intake and exhaust port in split view

4.3 Valve train

The final assembly of the valve train resulted in reused components from Honda engine together with a new design of camshaft, cam rocker shaft and a bridge, se Figure 3. The design of the valve train allows easy maintaining and access to the other cylinder head components without dismantling. An important feature is the possibility to remove and mount the sparkplugs without disassembling the whole valve train. From the crankshaft pulley a timing belt rotates the camshaft which has two separate cam lobes, intake and exhaust. A mechanism with rocker arms attached in a bridge translates the cam profile into vertical valve motion. The rocker arm shaft and camshaft is mounted with low friction composite bearings to minimize friction during valve motion. The valve rocker arms have adjustment nuts to manually adjust the clearance between the valve rocker arm and valve shaft. The bridge is secured in position with one screw and is fixed relatively the cylinder head with guidance slots milled into the cylinder head.

The camshaft is axially and radially fixed with a shaft between the cylinder head and the valve cover frame, which allows easy maintaining. Since the camshaft is attached to a pulley with one screw it allows minor adjust of the valve timing. The benefits with this design of the cam lobes separated and attached to a pulley, is to allow easy manufacturing and therefore the investigation of valve timing influence is simplified in future. Since no strength analysis has been carried out, there are some concerns regarding the stiffness of the camshaft attachment.

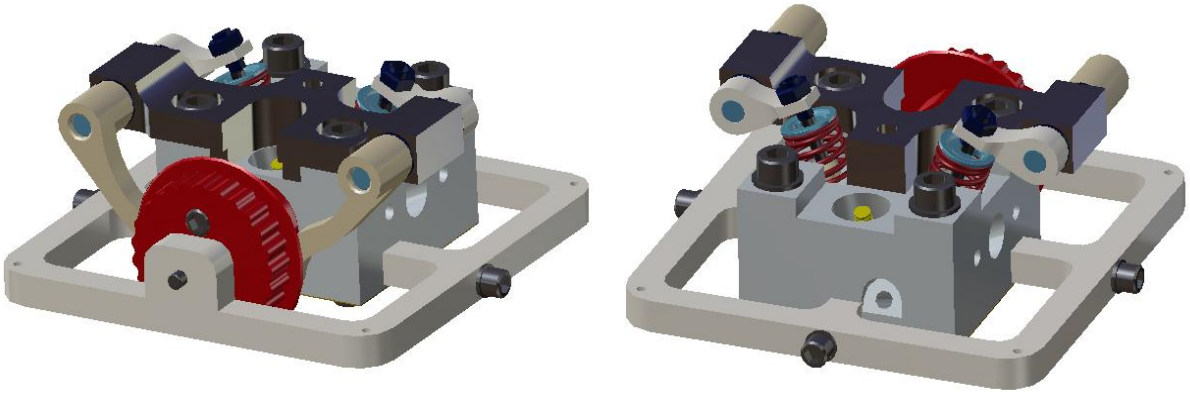

Figure 3, valve train assembly

4.4 Cylinder head assembly

A complete assembly of the cylinder head is showed in Figure 4. The intake runner with injector, exhaust manifold and valve cover are added compared to Figure 3. The length of the intake runner and exhaust manifold has not been decided since a GT-power simulation will provide input values of runner geometries and valve timing. The valve cover is box shaped in order to make it possible to attach isolation to decrease heat transfer. The overall dimensions of the cylinder head assembly are 107mm wide 107mm deep with a height of 45mm, excluding intake and exhaust runner. Figure 5 shows the assembly from below where gaskets, dowels, valves and sparkplugs are mounted in the cylinder. Since the spark ignition system has not been decided, holes at top of the valve cover for ignition wires are missing, but are considered to be implemented when the choice of ignition system is decided.

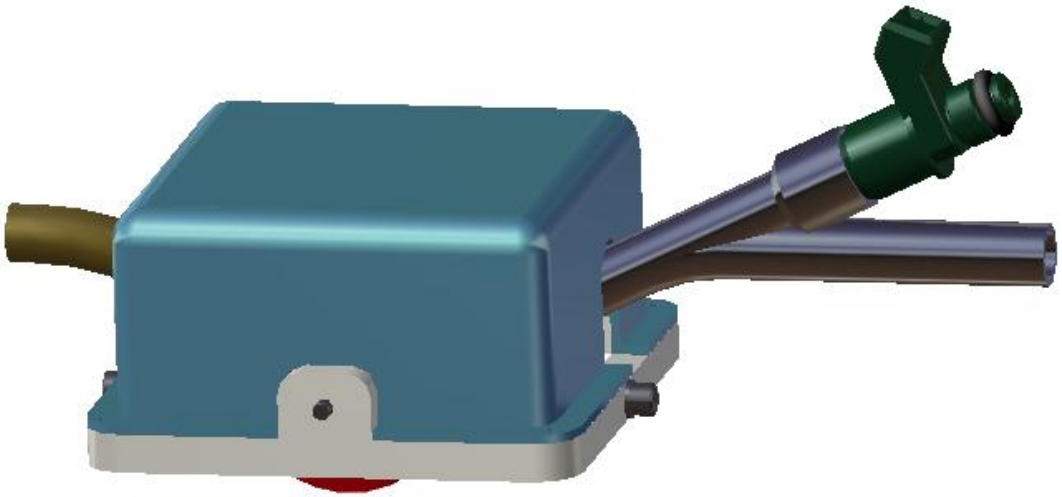

Figure 4, Complete assembly of the cylinder head

An important functionality of the valve cover is that it will act as a reinforcement of the valve cover frame to ensure minimal movements in the position of the camshaft. Any movement in the shaft of the camshaft will influence the valve timing, hence VE will be affected.

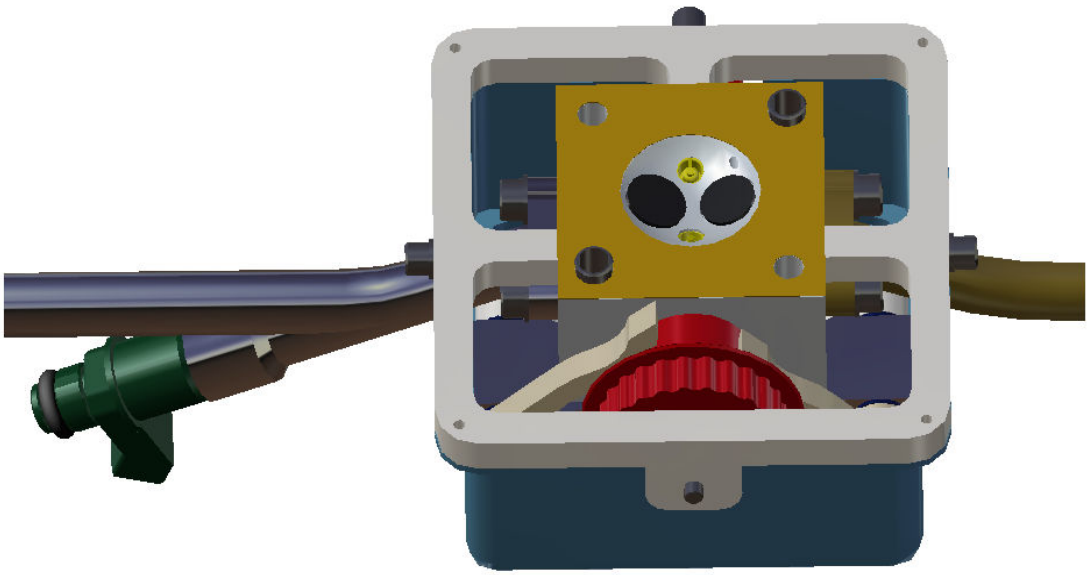

Figure 5, Complete assembly of the cylinder head from below

4.5 Crankshaft

The crankshaft is designed in three parts, see Figure 6. Two parts with counterweights and a connecting pin in between. The connecting pin is mounted with a press fit of 0.03 mm. The shaft ball bearings are mounted according to SKF standard with a rotating motion on the inner ring and press fit on the outer ring. The torque transfers from the shaft to the support functions such as trigger wheel by a 32x4 mm key. The stroke was chosen to be 40 mm and the overall dimensions were taken from the original Honda crankshaft. The counterweights have not been calculated to maximize efficiency or reduce vibrations due to lack of time. During the design phase some concerns were raised regarding the Alumec material used in manufacturing the crankshaft. Even though Alumec is an high strength aluminum the press fit will not accept any disassembly. Due to this, the crankshaft might have to be manufactured in steel.

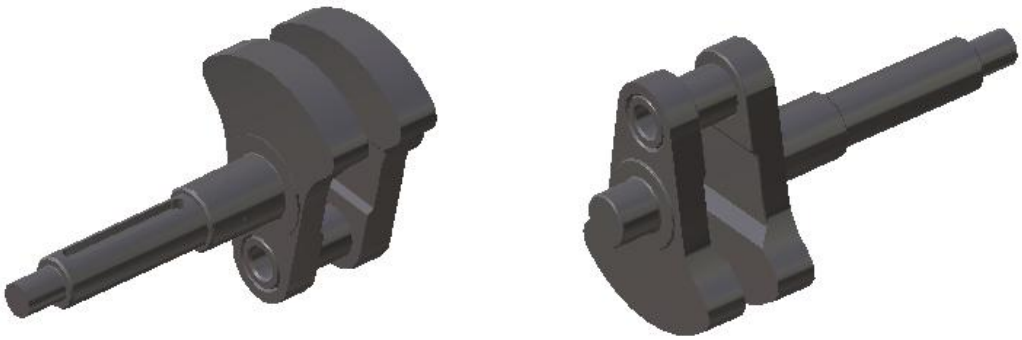

Figure 6, Crankshaft seen from two different views

4.6 Connecting rod

The connecting rod, see Figure 7, is designed in one piece in Alumec due to the high stresses. It is basically a stretched version of the original Honda connecting rod. At the big end of the crankshaft two flat washers in brass are mounted to reduce friction towards the crank shaft. There are some concerns whether the rod is strong enough. These concerns apply specially to the area where the small end is connected to the narrow part of the rod. In the small end the piston pin is press mounted in the connecting rod. In the big end a needle bearing is press mounted. Inside the needle bearing the crankshaft pin is mounted axially. The connecting rod has a length from center to center between piston pin and crankshaft pin of 70 mm.



Figure 7, Connecting rod with crank- and piston pin assembled.

4.7 Piston

The piston, see Figure 8 has a bore of 29mm and a height of 19mm. To accomplish the targeted compression ratio, a volume in the piston top was removed. This is also a benefit for increased tumble and lowers the heat transfer due to decreased surface to volume ratio. The piston pin has a diameter of 8mm which could rotate in the pin holes and is secured in vertical direction by the connecting rod. The piston pin is used from the Honda engine which has a greater power output, and therefore it is assumed to be sufficient regarding strength. The piston top has a minimum material of 3mm in order to withstand the gas forces, though no calculations are performed only based on other pistons as reference. Only one piston ring is used to minimize the friction, though a second one could be added if blow by appears to be critical. The total combustion volume including combustion chamber, piston volume and gasket resulted in a volume of 2.64cc to accomplish a compression ratio of 11:1. Since the connecting rod is long enough, no clearance for the counterweights had to be made, se Figure 9.

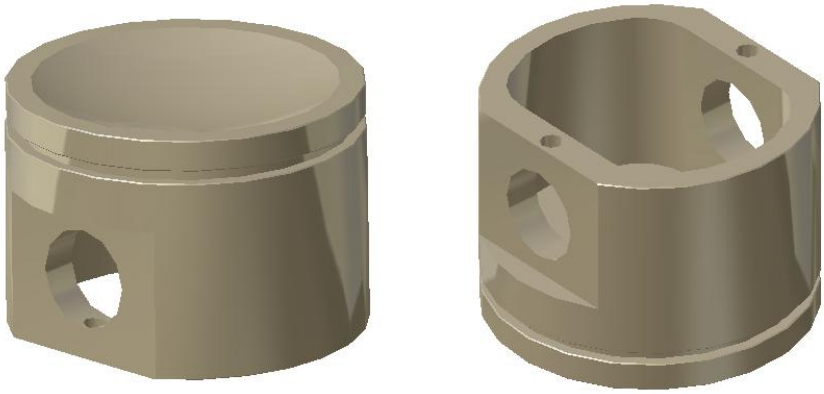

Figure 8, Piston from top and bottom view

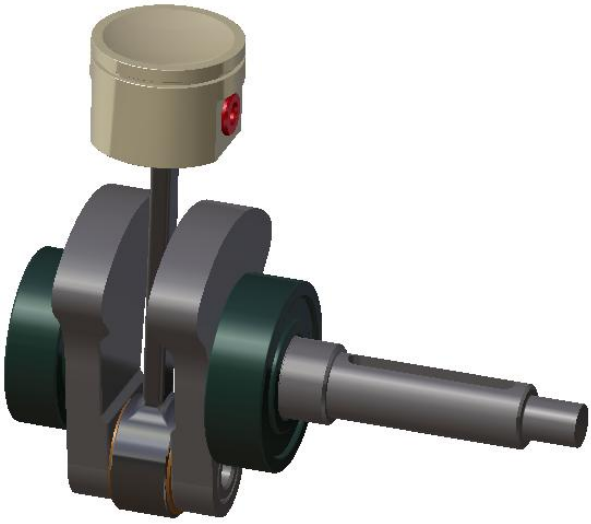

Figure 9, Piston and crankshaft assembly

4.8 Crank house

The crank house, see Figure 10, is a simple design since it is a static construction. The crank house has been designed to reuse the bearings from the original Honda engine. The bearings are mounted at the same distance due to the width of the crankshaft which is the same as the original shaft. The crank house is split in half in vertical direction in order to simplify the manufacturing.

The bearing houses are milled with low fit in order to reduce the frictional forces on the bearings. The two bearings are instead locked in the bearing houses using cylindrical locking fluid. The idea was to reduce the internal friction of the bearings. The house is a very neat construction with counter sunk bolts partly covered by crossing bolts. In the split inside the crank house just beneath the area where the cylinder is mounted there is a pocket to secure accurate play for the connecting rod. On the outside of the crank house, six threaded holes are placed for the mounting of the engine plates where starter and clutch assembly is mounted. The material of construction is aluminum 6062 which is considered sufficient for this type of application. The crank house of the origin engine is a casted aluminum alloy which has been proven strong enough. The 6062 is a high strength alloy and is therefore unlikely to cause problems.

The lubrication system consists of two parts. The oil pan integrated in the crank house and the counterweights. The counterweights are designed to stir a mist of oil when passing a bed of oil in the lower part of the crank house. The amount of oil has not been tested though it is a source of viscous friction that needs to be evaluated.

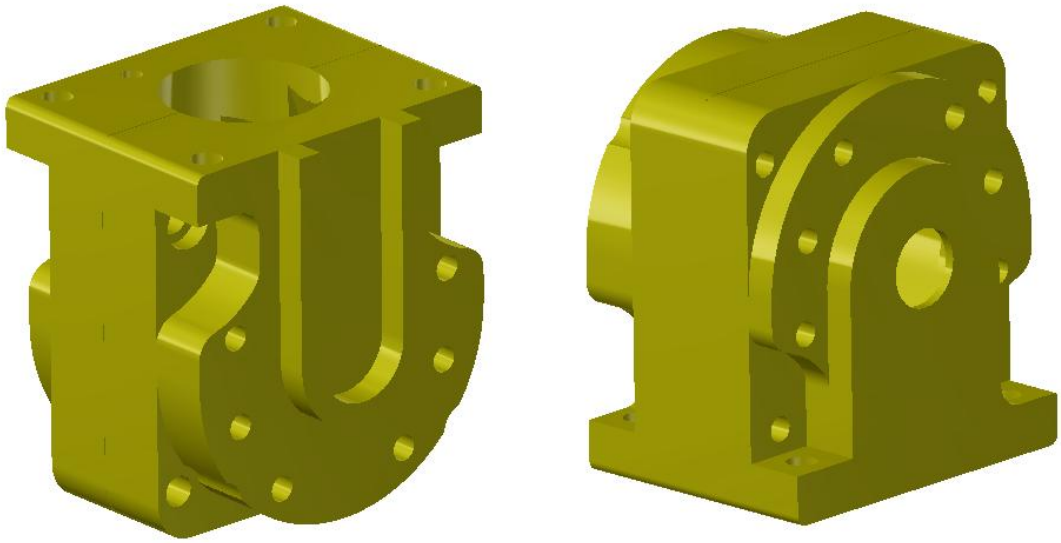

Figure 10, Crank house from different views

4.9 Cylinder

The cylinder, see Figure 11, is composed of two parts, cylinder base and liner. The measurements for the cylinder are 65 mm wide, 55 mm deep and with a height of 60.5 mm. The liner is 65 mm high with a diameter of 32 and 35 mm at the top. A heel is made in the cylinder base 5 mm deep to support the liner when it is fitted. The bore of the liner is 29 mm and the piston to wall clearance is 0.04 mm. The cylinder is connected to the crank house with four bolts and one aligning pin. The liner is submerged into the crank house and centers the liner towards the crankshaft.

The cylinder base consists of a large amount of material which could be removed to save weight. To simplify attachment of cooling blocks in the future, it is made square. The cylinder base is made of 6062 aluminum and the liner of cast iron. The reason it is made in two pieces is to simplify the process to change liner and to be able to perform experiments with different materials. The second explanation is to make it as light as possible since a solid cylinder of cast iron would increase the weight a lot.

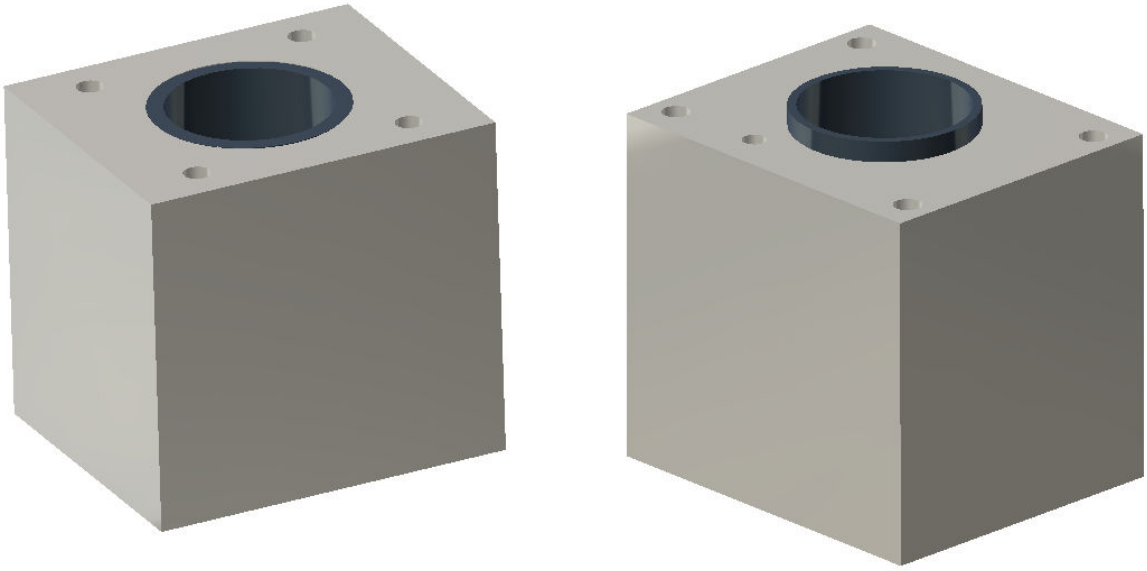

Figure 11, Cylinder from different views

4.10 Clutch assembly

In an attempt to reduce the number of parts to manufacture, several parts were reused from the original Honda engine. Everything from the centrifugal clutch to the drive gear has been reused. In order to mount these things properly a mounting bracket had to be manufactured which covers the whole assembly from the trigger wheel to the clutch hub. This bracket is then mounted onto the front engine plate which is bolted to the crank house, see Figure 12 and 13.

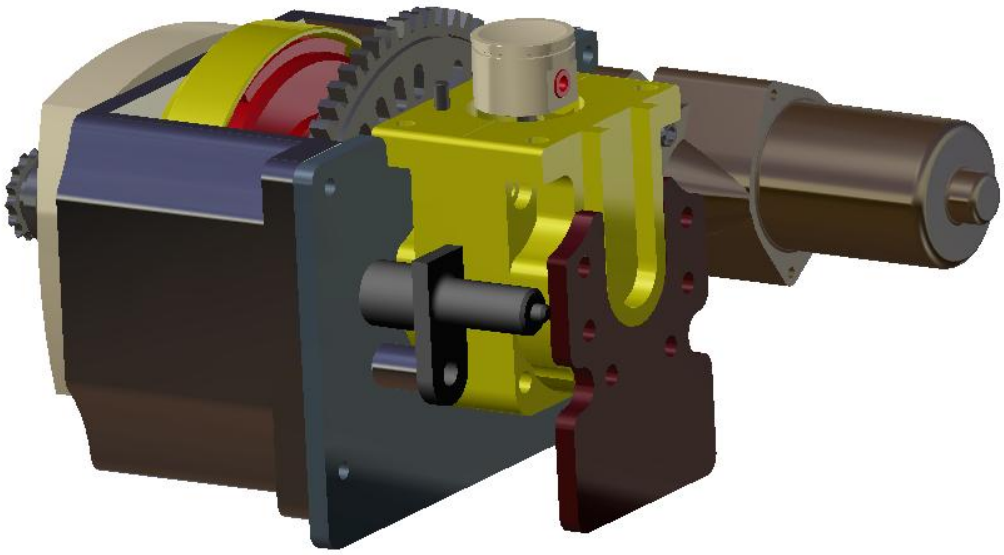

Figure 12, Clutch assembly

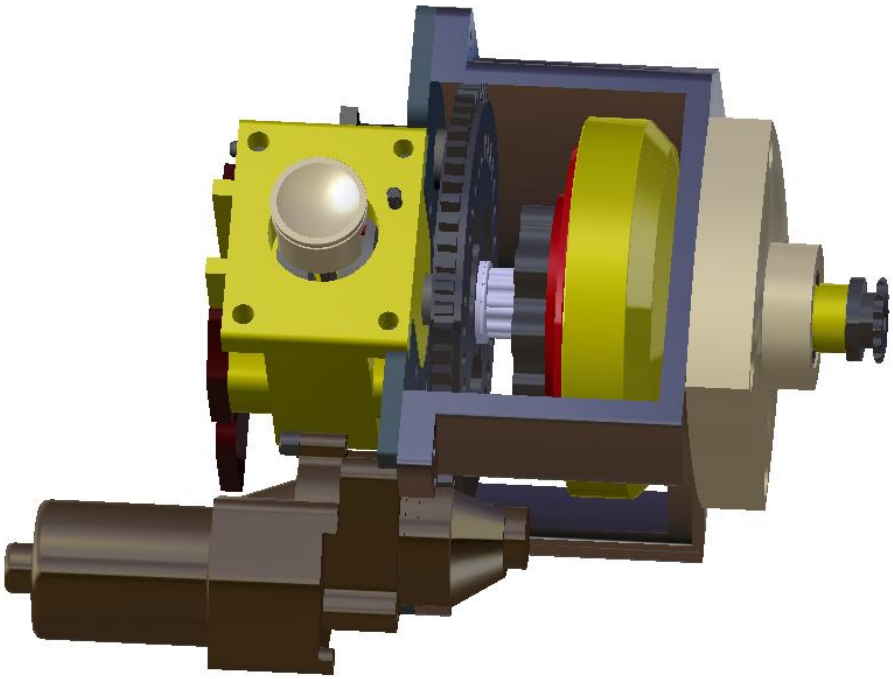

Figure 13, drivetrain assembly

4.11 Complete engine assembly

A complete engine assembly excluding valve cover is presented in Figures 14 and 15. It is clear that the clutch assembly, and starter engine contributes to a large volume and weight of the engine. From Figure 15, the mounting of engine brackets, flywheel sensor and cylinder pressure sensor can be seen. Compared to the Honda engine, the size of it is similar or even smaller, though the weight is greater.

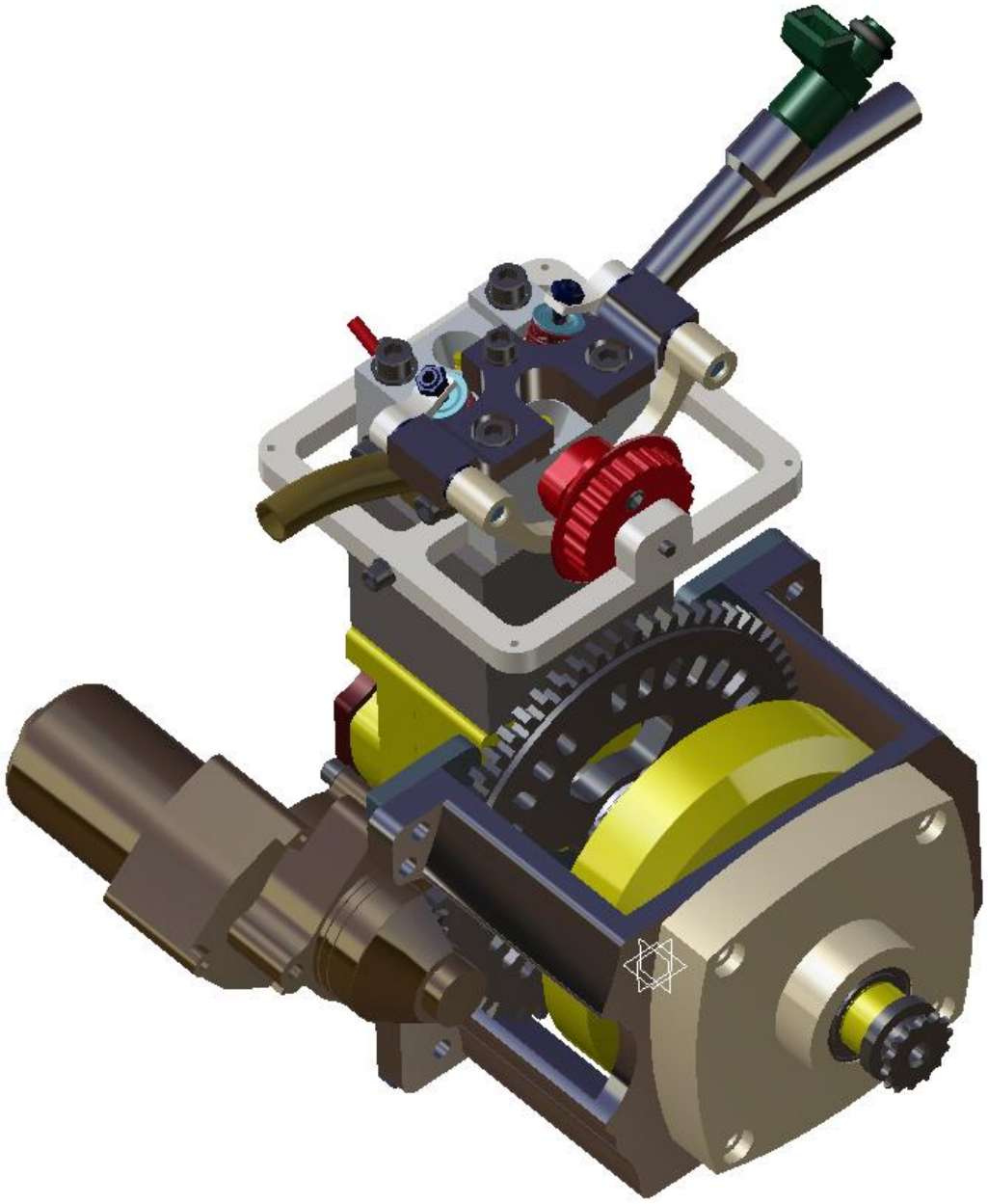

Figure 14, complete assembly of the engine seen from front

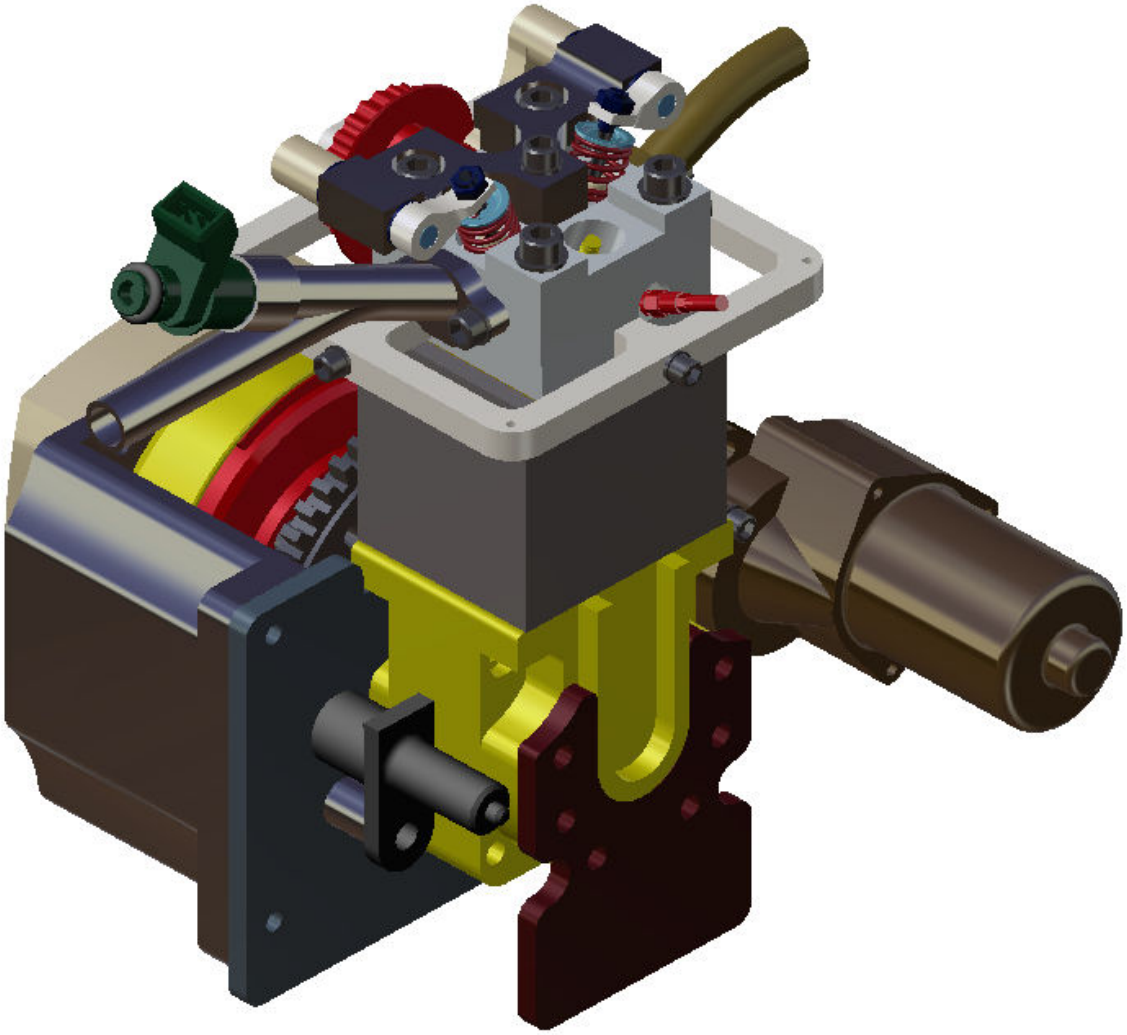

Figure 15, complete assembly of the engine seen from rear

5 Discussion

The engine that has been carried out from an intensive CAD period is not optimized regarding BSFC, which was not the goal of the project. The goal was to obtain a modular engine which could act as a base to begin a new development towards a fuel efficient SI engine. In our point of view an engine with great development potential has been developed, which could be improved in many ways. The benefit with this design is a modular engine which could be improved piece by piece. Since it could be hard to analytically determine the effects of changes there is a great possibility to perform experimental test. Different, strokes, bore, connecting rod length, compression ratios, piston geometries, piston rings, surface coatings, valve timing, spark timing and isolation are suggestible areas to investigate to improve BSFC.

Since the goal of the project was to carry out a final assembly of a modular engine, the final weight of it has not been priority. Therefore when a final engine concept has been made, the weight optimization process should be conducted in order to lower fuel consumption for the vehicle.

Due to lack of time during the project the design has been the priority and therefore strength analysis and simulations have not been carried out. The most important simulation that is necessary to complete the engine is a GT-power of the valve timing and intake and exhaust runner length. The valve timing is crucial in order to get a proper VE and thereby a fuel efficient engine.

The aim during the design was to create an engine possible to manufacture at Chalmers. Many shortcuts have been taken during the design process due to lack of time. These shortcuts are the base for further development and can be divided in mainly three parts.

- Strength analysis
- CFD analysis
- Engine parameters

The strength analysis part should any student at the mechanical engineering program year two be able to cope with. This part might be the easiest to deal with and it includes analysis of strength, fatigue behavior and in the end weight optimization of parts.

The two remaining parts are more difficult and should perhaps only be performed as a diploma work or higher level. The fluid analysis demands much work and simulation dependent on the geometries of the engine. This is a very extensive part and it is hard to overwhelm the coverage of this area.

From an engineering point of view the engine parameters determines the fuel efficiency to a large amount. The engine parameters set in this design were not subject to any extensive calculations. Due to this, further work could include for example some of the following factors.

- Piston design
- Connecting rod length
- Bore to stroke ratio
- Combustion chamber design
- Bearing designs
- Valve configurations
- Choice of material

One very important factor to take into consideration is that the development of this engine must be kept alive. Once the development work is discontinued, knowledge will be lost due to lack of knowledge transfer and forgetfulness. Even though the engine will not compete in the Eco Marathon competition, students might find it interesting to further develop this engine. The best situation though, would be to have a competition where the development work can be graded and students can see the result of their work. The competition would work as a challenger for the student and push the development forward. Therefore the best idea would be to continue competing in Eco Marathon since it is a great challenge for students who have the ability and knowledge to construct. These students have to be taken care of. They are the future constructors and the sooner they challenge themselves the better they will be and the greater products they will be able to construct.

6 Conclusions

The overall conclusion from this report is that the aim is fulfilled. The goal of an engine design which permits further development has been achieved. There are several factors in this design which might be subject for development. Some examples of this have been discussed. It is the authors strong recommendation that students are involved in this engine since it is a source of great knowledge. The authors have gained much knowledge during the design phase, knowledge which would have been hard to get in other courses. This engine is a great base for the practical part of the educational work carried out at the department of applied mechanics since it involves a challenge in form of the competition Shell Eco Marathon and practical work.

To build a fuel efficient engine, heat and friction losses should be minimized. Even if the design carried out does not show desirable low fuel consumption it could be stated that it is a good engine for further development.

The majority of the time spent on the project was during the CAD period. Many of the parts showed complex to model and required an iterative process, to fulfill required goals. The biggest challenge was to design the components small enough at the same time it should be strong enough and possible to assemble. Since no simulations regarding strength or engine performance has been performed the durability or engine performance is unknown. It is worth mentioning that the authors had a huge amount of knowledge in engine design from previous experiences. This is reflected in that the engine is a good construction which is not possible to achieve with a lack of knowledge. The authors would like to note that they are willing to help and give aid to students who are interested in developing the engine.

7 References

[1] Heywood, J. R.; Internal combustion engines fundamentals, 1998

[2] Altin, I.; Sezer, I.; Bilgin, A. Effects of the Stroke/Bore Ratio on the Performance Parameters of a Dual-Spark-Ignition (DSI) Engine. ACL Publication DOI: 10.1021-ef800332m , 2008

[3] Filipi, Z. S.; Assains, D. N. The effect of the stroke-to-bore ratio on combustion, heat transfer and efficiency of a homogeneous charge sparkignition engine of given displacement. *Int. J. Engine Res.* 2000, *1* (2).

[4] Suzuki, M.; Iijim, S.; Maehara, H .; Moriyoshi, Y .Effect of the Ratio Between Connecting-rod Length and Crank Radius on Thermal Efficiency. SAE Paper 2006320098, 2006