CHALMERS







# Development of Android Software for Logging of Engine Data for Shell Eco Marathon

*Bachelor's Thesis in Computer Science and Engineering*

JOHANNES WESCHKE
EWA SIMPANEN
PHILIP STEINGRÜBER
JOANNA ERIKSSON
MIKAEL JOHANSSON
ANDERS NORDIN

Department of Computer Science and Engineering (CSE)

CHALMERS UNIVERSITY OF TECHNOLOGY
Gothenburg, Sweden 2013
Bachelor's Thesis/report no. 2013:023

# Acknowledgements

This report is written as a partial fulfillment of the requirements for a bachelor's degree at Chalmers University of Technology at the Department of Computer Science and Engineering. The report describes the development of a new tool for the Chalmers Vera Team car.

The work started in January and ended in June the same year, 2013.

We would like to thank Civinco AB for their help and support throughout the project.

Finally, a special thanks to Anders Johansson at the Department of Applied Mechanics and Roger Johansson at the Department of Computer Science and Engineering for their feedback and supervision.

# Abstract

Teams taking part in the Shell Eco-marathon challenge compete to create a vehicle that is as fuel-efficient as possible. To fulfill this goal the vehicles in general and especially their engines have to be as optimized as possible. To be able to do this as efficiently as possible the teams require a way to analyze how the engine performs and what it does over the course of a run. Most teams accomplish this by connecting the vehicle's ECU (Engine Control Unit) to a laptop after the completion of a run and processing the recorded logs. A much better solution would be for the team to be able to read these logs in real-time which would allow them to make adjustments after the run as well as relay information to the driver. This report deals with the issues and result of an attempt to solve this issue using an Android application.



# Sammanfattning

Deltagarna i Shell Eco-maraton tävlar om att bygga en så bränslesnål bil som möjligt. För att uppnå detta måste bilarna och i synnerhet dess motorer vara optimalt konfigurerade. Detta kräver att lagen har möjlighet att analysera hur motorn presterar och uppför sig under körning. De flesta deltagare gör detta genom att ansluta bilens styrenhet (ECU, Engine Control Unit) till en bärbar dator efter körning. En bättre lösning hade varit att låta laget utläsa datan från styrenheten under loppets gång. Det hade gett dem möjligheten att efter loppet utföra justeringar på bil och motor. Denna rapport behandlar problem och resultat som uppkommit vid gruppens försök att skapa en bättre lösning med hjälp av en Android-applikation.

# List of abbreviations/terminology

**3G** Third generation telecommunication service.

**Android** Operating system for smartphones.

**API** Application Programming Interface, describes the available functions of a software component and how they should be used.

**DAQ** Data acquisition System. Is the process that samples signals which corresponds to physicals values and converts them into digital numerical values that can be read by a computer.

**DOM/SAX** Document Object Model, Simple API for XML: models for processing XML documents.

**ECU** Engine Control Unit.

**GUI** Graphical User Interface.

**Java** A platform independent programming language.

**JFreeChart** Java library used in Windows-application for drawing charts.

**JMapViewer** Java library used in Windows-application for drawing maps.

**Kernel** Central part of an operating system, acting as a communications layer between applications and hardware.

**L2C** Linear to Circular

**MySQL** My Structured Query Language, relational database management system typically used with PHP.

**Paper prototyping** Drawing crude prototypes on paper prior to development. Commonly used when designing GUIs.

**Parser** A method, or program, to do the parsing.

**Parsing** Processing of data for use in a software application.

**PHP** Hypertext Preprocessor, a server-side scripting language mainly used for web development.

**RAD** Requirements Analysis Document, a document containing the list of requirements set up for an application.

**SDD** System Design Document, a document set up by the developers on how the program is built.

**SQL** Structured Query Language, programming language used for relational database management systems.

**SQLite** Relational Database Mangement System used in Android.

**Thread** Lightweight process that allows for separate functions to be carried out in a manner that makes them seem simultaneous.

**UI Thread** User Interface Thread, the main thread for execution.

**USB** Universal Serial Bus, a industrial standard to define cables, contacts and comunication-protocol for connecting electronic devices.

**WiFi** Technology that allows wireless communication.

**XML** Extensible Markup Language, a language for defining rules on how to encode a document in a format that can be read by both humans and comuters.

# Contents


**1 Introduction** **1**
- 1.1 Background . . . 1
- 1.2 Objective . . . 2
- 1.3 Task . . . 2
- 1.4 Methods . . . 2
  - 1.4.1 Pre-study and analysis . . . 3
  - 1.4.2 Development . . . 3
  - 1.4.3 Integration and validation . . . 3
- 1.5 Limitations . . . 3

**2 Engine Control Unit** **5**
- 2.1 Data transfer protocol . . . 5
  - 2.1.1 Initiate data transfer with the ECU . . . 5
  - 2.1.2 Data-package from ECU . . . 6

**3 Sensors** **7**
- 3.1 Critical data . . . 8
  - 3.1.1 Speed . . . 8
  - 3.1.2 Steering . . . 9
  - 3.1.3 Tire pressure . . . 10
- 3.2 Post evaluation data . . . 12
  - 3.2.1 Strains in the framework . . . 12
  - 3.2.2 Camber, Toe in & Toe out . . . 13
  - 3.2.3 G-force acceleration . . . 14
  - 3.2.4 Engine chain tension . . . 15
- 3.3 Arduino -Microcontroller . . . 16
  - 3.3.1 Data transfer from the Arduino to the Android-phone . 17
  - 3.3.2 Data transfer protocol . . . 18
  - 3.3.3 Arduino program . . . 20

**4 Mobile Application** **21**
- 4.1 Layout and Design . . . 21
  - 4.1.1 Start- and Run-view . . . 21
  - 4.1.2 Action bar and Settings . . . 25
  - 4.1.3 Application icon . . . 28
- 4.2 Functionalities . . . 29
  - 4.2.1 Global positioning system . . . 29
  - 4.2.2 Run view . . . 30
  - 4.2.3 USB Connection . . . 33

4.2.4 Bluetooth Connection . . . 34
4.2.5 Storage . . . 34
4.2.6 Transfer of logged data . . . 35

**5 Database** **36**
5.1 Database modeling . . . 36
5.2 Data transfer to database . . . 36
5.3 Conversion to physical values . . . 36
5.4 Transfer from a web server . . . 37

**6 Desktop application** **38**
6.1 Development process . . . 38
6.2 GUI design process . . . 38
6.3 Implementation . . . 39
6.3.1 Web connection and collection of data . . . 39
6.3.2 Reading existing logs . . . 40
6.3.3 Parsing . . . 40
6.3.4 Threading . . . 41
6.3.5 GUI . . . 41

**7 Discussion** **42**
7.1 ECU . . . 42
7.2 Sensors . . . 43
7.3 Mobile application . . . 44
7.3.1 Graphical User Interface . . . 44
7.3.2 Calculation of a new lap . . . 45
7.3.3 Heap size error . . . 45
7.4 Database transfer . . . 46
7.5 Desktop application . . . 46
7.5.1 Lack of testdata . . . 46
7.5.2 GPS Plotting . . . 47
7.5.3 Warning flags . . . 47
7.6 System in total . . . 47

**8 Conclusion** **50**
8.1 Possible future developments . . . 50
8.1.1 Plotting GPS coordinates . . . 50
8.1.2 Remotely modifying engine parameters . . . 50
8.1.3 Additional sensors . . . 50
8.1.4 Warning flag . . . 51

**A Contributions** **I**
A.1 Project . . . . . II
A.2 Report . . . . . III

**B Data sheets** **V**

**C Documentation of software** **XXXIX**
C.1 RequirementsVerApp . . . . . XL
C.2 RAD VerApp . . . . . XLV
C.3 RAD VerApp Desktop . . . . . XLIX
C.4 Use Cases VerApp . . . . . LII

# List of Figures


1 ECU Protocol . . . . . 6
2 Hamlin 59025-1-S-02-A . . . . . 9
3 Wabash 971 RPS . . . . . 10
4 Impaqed Products BV TPMS 10.02.011 . . . . . 11
5 Radiotronix RCR-433-MPR . . . . . 12
6 SpectraSymbol Flex Sensor . . . . . 13
7 Illustration of camber . . . . . 13
8 Illustration of toe in and toe out . . . . . 13
9 Sharp GP2Y0A41SK0F . . . . . 14
10 Memsic 2125 #28017 . . . . . 15
11 IC Haus LFL 1402 . . . . . 16
12 Engine chain tensioner . . . . . 16
13 Microcontroller connection scheme . . . . . 17
14 Bluetooth data package . . . . . 19
15 Start view . . . . . 22
16 Searching for GPS signal . . . . . 22
17 GPS signal found . . . . . 22
18 Warning sent . . . . . 23
19 Run view . . . . . 24
20 Confirmation dialog . . . . . 25
21 Options menu . . . . . 26
22 Settings menu . . . . . 27
23 Logging frequency option . . . . . 27
24 App icon . . . . . 28
25 First attempt to calculate new lap . . . . . 31
26 Desktop application . . . . . 39
27 System overview . . . . . 48

# 1 Introduction

The greenhouse effect has been a hot topic over the last years and one part of counteracting this development is to build more fuel efficient cars. To develop the most fuel efficient car in the world, the developers need to know as much about the car's behaviour as possible to find out where the energy losses are taking place. This project will focus on developing a system consisting of an android application which receives data from an ECU and sends it to a computer via a web server.

## 1.1 Background

Shell Eco-marathon is a competition with the aim of creating the most fuel efficient vehicle. The competition consists of three big races over the course of a year where hundreds of universities are in contest over who can cover the longest distance with only one liter of petrol. One team has reached a distance of 2485 kilometers which is equivalent to the distance between Paris och Moscow. Chalmers competes in the two main classes, which are Prototype and Urban Concept. In the Urban Concept class the goal is to emulate a real life car, whereas in the Prototype class the single goal is to construct the most fuel efficient vehicle. Chalmers currently holds the swedish record in the prototype class with a distance of 1243 kilometers.

The team participating in the Prototype class (Chalmers Vera Team) is in need of an Android application to log data from the ECU as well as display important values for the driver during the race. The team currently uses a Windows-based software run on a laptop for this task. However, due to the importance of keeping the weight of the vehicle to a minimum they aren't able to keep the laptop in the vehicle during races. This means that the team has no way of keeping track of ECU-data in real-time which would enable them to make better adjustments.

This system would provide the Chalmers team a unique opportunity to process data that can result in an improvement of the engine.

## 1.2 Objective

The purpose of the project is to develop a software system that handles the communication between the Vera-team and the engine. The software will be used to log, send and save data from the engine that will be presented to the team in real time. In addition to the data handled from the ECU the vehicle's GPS-position will be logged and used to several functions as speed and position.

Based on this communication tests while driving, optimization of the vehicle will be performed. The most important part in case all requirements are not achieved is that the software can store data and and then transfer it to a computer for presentation using the already existing software.

## 1.3 Task

The system's main function and also the main goal of the project is to simplify communication between the race team and the car's ECU, engine control unit. The software developed provides the team with information about the car's properties while driving.

The communication to the engine will be performed by the ECU and will log data e.g. engine speed, temperature and petrol consumption. The data is then being transferred by a USB-wire to an android phone where the data is being saved. The data after that is transferred to the team's computer through 3G or Wi-Fi. At last, the data will be presented on the computer to the user. On the smartphone there will also be a GUI (Graphical User Interface) which will provide the driver with information about elapsed time, lap times, average speed and current speed.

## 1.4 Methods

The project will be split into multiple parts: pre-study and analysis of requirements; development; and finally testing, validation and integration into the vehicle.

### 1.4.1 Pre-study and analysis

This stage consisted mainly of collection and analysis of requirements, which was done in collaboration with the Vera team. In practice, this was done by oral and written communication with team leader of the Vera team where the purpose of the application and its requested features were discussed. Based on this a document stating requirements were compiled which can be found in appendix C.1. A Requirements and Analysis document (RAD) has also been developed for the mobile application and desktop application which can be seen in appendix C.2 and C.3. The documents were then sent to the team for approval. To describe the functions of the application a document stating use cases has been compiled and can be found in appendix C.4.

### 1.4.2 Development

Early on in the process of development the group was split up into several parts; communication between ECU and smartphone; communication between smartphone and web server, including GUI for the app itself; communication between web server and computer as well as presentation of data; and development and integration of additional sensors to collect data from other parts of the vehicle than the ECU. Further reading on the development process can be found in **??** through 6.

### 1.4.3 Integration and validation

This phase of the project focuses on making sure that the applications developed meet the requirements set up by the Vera Team in a satisfactory way as well as making any necessary changes to achieve this goal. This will be done in conjunction with the Vera Team in the process of integrating the finished product into the vehicle and the everyday work of the team.

## 1.5 Limitations

In order to make it possible to realize this project during a limited amount of time while keeping costs down and avoiding unreasonable risks some lim-

itations have been made to the project.

In this project no investigation will be taken to find the optimal phone but only to find a phone meeting the requirements to fulfill the goal of this project.

The group has not had any influence over which type of engine control box(ECU) is placed in the vehicle and the system will therefore be custom made for this particular ECU. The system will be designed for a SA3000 from Civinco AB.

Based on the background of the group members the programming of the desktop application will be done in Java. No inquiry will take place concerning which language would be best fitted to use.

The project is limited to only read data from the ECU and not write to it. This limitation is done based on the fact that the group has not been given the opportunity to take part of documentation describing how this is done. Also, the group does not possess the proper knowledge of experimenting with engines which could result into personal as well as material damages.

# 2 Engine Control Unit

The engine in a car today is controlled and managed by a small embedded computer system called the car's Engine Control Unit, ECU. The ECU controls all the critical parameters such as fuel injection, ignition and the boost-control of the car's engine. By optimizing these parameters you can enhance the performance and the efficiency of the engine.

All the parameter settings in the engine are stored in the memory of the ECU and can be changed during operation for optimization. The ECU controlling the Vera car's engine is from the tuning-device company called Civinco and their latest control unit, the SA3000.

## 2.1 Data transfer protocol

The data transfer between the ECU and the smartphone is based on a standard USB-serial connection where the phone initiates and controls the communication between the two units. In this system the phone acts as the USB host and is responsible for managing all the data transfers over the USB bus. The ECU acts as a USB device and only sends data onto the USB bus after an established connection and a request from the phone.

### 2.1.1 Initiate data transfer with the ECU

To initiate reading of log data from the ECU the protocol states that the host, the controller of the communication, sends "bL" (binary Logging) to the ECU, this sets the ECU in a binary logging state. In this state the ECU waits for an address for a register to start reading from. For this project, the start address is "0x00" meaning that reading starts at register 0. Subsequently, the ECU is listening for how many register to read, in our case "0x30"(corresponding to 48 in decimal form), to read up to register nr. 47. Further reading on the initialization protocol, see appendix "Specification of binary data-packages" for a full description of the initialization protocol.

When the ECU reads a full command input, in our case "bL 00 30", it starts to loop through the given registers and send data sequentially from the register (one data-package per loop) on to the USB bus.

### 2.1.2 Data-package from ECU

After a complete initialization and the transfer-command has been executed, the ECU starts to send data-packages on to the USB bus. The packages are specified by the protocol to contain three parts, the head, the payload and the tail, see 14. The header contains of three bytes of data, where the first 2 bytes are “PS” (ASCII-value) to declare the beginning of a new package. The third byte in the header is the number of registers that have been read and added in to the payload. The payload carries the data from the registers that have been read in the ECU. The payloads can have a size ranging from 0 to 200 bytes depending on the number of register read in the ECU. Each register consists of 16 bits and is therefore divided into two bytes before being added to the payload. The tail consists of four bytes, two bytes of control-bits and two bytes, ”DS” (ASCII-value), to declare end of package.

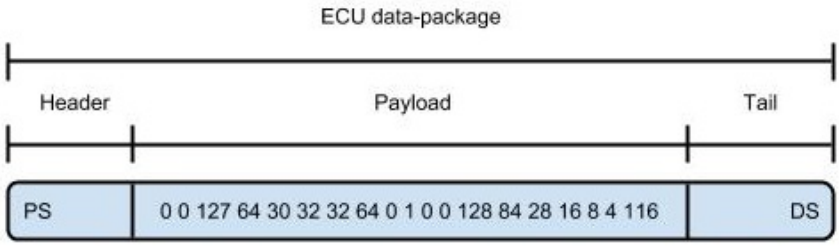


Figure 1: *ECU data package*

# 3 Sensors

Much needed data is conveniently accessible through the ECU. However, there are still some parameters that are of interest, which are not connected to the engine in the same manner. Some of these are a helpful support to the driver, who is constantly coping with the task of keeping a steady pace and a straight course, momentarily lowering the impacts of friction and getting the most out of as little fuel as possible. Other data is valuable for the team as they evaluate the runs and attempt to optimize performance in a longer time perspective, which enables continuous development.

Accessing new data in the vehicle, requires a selection process to find useful transducers and sensible ways of installing them. These systems need to be robust enough to be able to perform in this unique environment, taking to account the disturbances caused by ignition, moisture, high or low temperatures, judder etc..

The data from the ECU is to be sent to the smartphone which presents some of the data and transmits all of it to a server. Therefore, the data collected by the various sensors is preferably sent to the mobile phone and merged with the data from the ECU before transmitting it further.

There are mainly two alternative routes to choose from. Either the sensors can be connected to the ECU's available input ports and get translated from there or they can be connected to a micro processor which gathers the data and then pushes it forward to VerApp. Which path is used is not at all much significant, maybe a combination of the two will be the best choice. Some of the signals could travel through the ECU and some through a micro processor, this will depend on what is most convenient and practical when installing the sensors and transducers.

The systems built to gather data external to the ECU, should be designed to be flexible, relatively stable and easy to use. The Vera Team should be able to maintain and make use of the systems without the need of assistance.

## 3.1 Critical data

There is some critical data, external from the ECU, which is of great help when driving the vehicle. This specific data should appear on the display of the mobile phone, through VerApp, which is easily accessible to the driver. One concern is that the display may get too cluttered. This must be taken into account when choosing which of the signals to be display.

### 3.1.1 Speed

Knowing the speed of the vehicle is important for many reasons. One is that the driver obtains increased control, which is good for safety. Another reason is that the official rules for Shell Eco-Marathon require both a certain speed and lap time. In the definition of competition it is stated:

> *"For their attempt to be validated,*
> *teams must complete ten laps in a maximum time of 39 minutes*
> *with an average speed of approximately 25 km/h.*
> *The total distance to cover is 16.117 km."*
> (Shell Eco-Marathon, 2013)

One possible way to estimate the speed of the vehicle is through measuring wheel speed. Being able to measure wheel speeds using sensors, allows a much better measurement of speed than calculating it using GPS signals. This method also provides additional information, as it can reveal how the wheels move in relation to each other. Measuring wheel speeds on all three wheels, provides the possibility to see if the car rears. This can occur when accelerating quickly. Wheel speed is a great indication when optimizing the timing of the beginning and end of an acceleration.

Measuring wheel speed is usually done by getting an indication every time the wheel has spun once around its axis. It is also common to use multiple indications per revolution. As the application is going to be installed in a real-time system, there is no need for indications more frequently than every ten seconds. The driver will not be able to comprehend changes faster than this.

Knowing that the average speed is no less than 25 km/h, allows one to conclude that the vehicle, at its lowest, will move at a speed of about 10 km/h in mid race. According to the data sheet, the tires have a diameter of 478 mm, see appendix B.1. If the tires spin at 10 km/h, at least 5.4 indications per revolution are necessary. When driving at 25 km/h, 2.2 indications per revolution will suffice.

The triggering can be done by attaching small magnets on the rims and a proximity sensor on the frame. The sensor chosen for this system was the Hamlin 59025-1-S-02-A, see figure 2 and the data sheet in appendix B.2. The Hamlin sensor is easy to install, it can handle variations in temperature, shock and vibration. Whenever one of the magnets come within a distance of 11.5 mm of the sensor, an induced current triggers it. Six magnets are attached on each wheel, 60° apart and with a distance of about 13 cm from the center. The six magnets on each wheel allow a speed as low as 9.01 km/h, if the measurements are to be made at least every 0.1 seconds. A worse resolution could then later be caused by the data transfer.



Figure 2: *The proximity sensor Hamlin 59025-1-S-02-A.*

A frequency is given from the Hamlin sensor, which can be matched against time in a graph or be recalculated into speed. In the case that a magnet would fail to trigger the proximity sensor for whatever reason, every sixth value would be lost. This is solved by processing the data in a way that the resulting speed is a combination of a calculated average value and the instantaneous speed. The speed and average lap time will be presented on the display of the mobile unit.

### 3.1.2 Steering

To have a visual representation of the steering angle helps the driver to keep the vehicle in line and minimize losses. It is valuable to have full control

in turns on the track. Being able to get data of the steering angle allows repetitive testing and try outs in a manner that was not possible before.

The potentiometer, Wabash 971 RPS, is attached on the steering wheel, see figure 3 and appendix B.3. It delivers values which have a linear relation to the amount of degrees it is being twisted in relation to its center position. It is also possible to use sensors that measure angles or distances between a fixed point at the frame and the front or back of the wheel. This method would have been more complicated to install and maintain. The potentiometer is accurate enough, it can handle temperature extremes, harsh environments and mechanical shock and vibration.

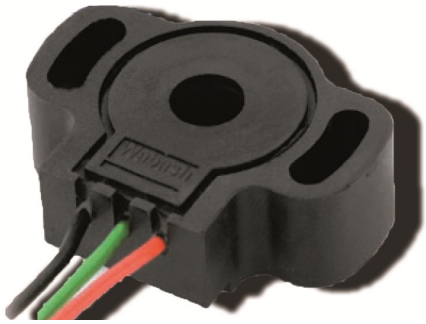

Figure 3: *The potentiometer Wabash 971 RPS.*

The linear rotation in degrees can be translated into a steering angle by conducting tests. The values will be divided into steps that are of an appropriate size. As the vehicle is being maintained and the potentiometers position is altered, its settings will change. There will have to be a function available in VerApp which allows calibration of the steering angle by specifying a new center value.

### 3.1.3 Tire pressure

To measure tire pressure can give the driver an indication of when a tire is loosing pressure. The vehicle has custom made carbon fiber rims, which are too expensive to run down. This would happen if the tires were to loose too much pressure.

As the wheels are in constant rotation, it is appropriate to use a pressure sensor capable of wireless transmission. It is common for car owners to use

TPMS, *Tire Pressure Monitoring System*. There is a wide range of models of TPMS available for cars and motorbikes (TPMS Sweden, 2013a) although it is difficult to find ones which fit smaller, tubeless tires. The sensors come in packages of two or four and are virtually always supplied with a huge display, which make the systems both heavy and expensive. This would not be an ideal solution for the vehicle as Vera has three tires and the data is to be shown through VerApp. An additional display would be too distracting for the driver and would contribute to unnecessary extra weight in the car.

Although it was hard to find, separate tire pressure sensors can be purchased in order to replace lost sensors. The sensor TPMS 10.02.011 from Impaqed Products BV, is an example of this, see figure 4 and appendix B.4. Unlike other TPMS sensors, these are fitted straight onto the valve rather than having to dismount the tire and replace the entire valve. Moreover, they are very small in size and weigh only 3 g each. Issues with the other systems not measuring up to more than 4 – 5 bar, which is suitable for an ordinary car, are solved by these sensors being capable of measuring up to 13 bar. The Michelin tires perform best when having a tire pressure of just above 6 bar, see appendix B.1.



Figure 4: *The tire pressure sensor TPMS 10.02.011 from Impaqed Products BV.*

Each of the three sensors are marked with a different tag to keep them apart, and they send data associated to this tag. A radio receiver which operates at the same frequency, 433.92 MHz, is needed to be able to pick up the signals. The receiver Radiotronix RCR-433-MPR is designed for remote communication using radio waves of this frequency, see figure 5 and appendix B.5. There are many receivers of this kind to choose from and the one from Radiotronix is as good as any of them.

The TPMS sensors available on the market have good resolution and accuracy. They are designed to withstand temperature fluctuations, moisture, dirt and judder. The data sheet in appendix B.4 specifies that the sensor has an accuracy of pressure measurement of $\pm 0.15$ bar. TPChecker motorcycle TPMS monitor tire pressure and temperature every 3 seconds (TPMS

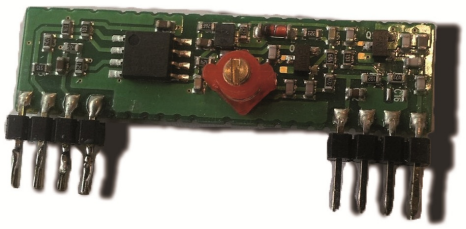

Figure 5: *The receiver Radiotronix RCR-433-MPR.*

Sweden, 2013b), it can be assumed that the sensors from Impaqed Products use a similar rate. The receiver has a data rate of 4 800 bytes per second and won't be hindering the transmission. However, there is need for a script that coordinates the data from the three sensors so that there will not be any losses.

## 3.2 Post evaluation data

There is sensor data which is not necessary for the driver to see while in the middle of a run. This data will not be presented before it is sent to the database. The values are used for the purpose of enhancing performance and is a basis for coming up with suggestions for long term improvements.

### 3.2.1 Strains in the framework

Vera's frame formerly consisted of carbon fiber, which initially is a very sturdy material but when it ages it loses its rigidness. The framework begun to shear. Therefore, it is interesting to measure unwanted displacements in the new steel frame to see if this is a good alternative material.

The deflections can be measured with the help of the SpectraSymbol Flex Sensor, see figure 6 and appendix B.6. Whenever the flex sensor is bent, its resistance changes. The flex sensor can easily be glued or otherwise mounted on the frame where measurements are needed. The sensor can handle variations in temperature, although it might be important to keep it dry. If there is too much moisture the resistance might be affected. The active length of the sensor is 9.5 cm and while flat, its resistance is 10 kΩ. When bending the

sensor, its resistance varies within ranges of up to 110 kΩ. Some of the most common uses for this sensor is in robotics, gaming and medical devices.




Figure 6: *The SpectraSymbol Flex Sensor.*

The flex sensor requires a lot of testing to evaluate its accuracy and function. Until the installation, this will not be possible to do. The data will be translated from resistance into a degree of displacement.

### 3.2.2 Camber, Toe in & Toe out

The wheels of the vehicle can sometimes be bent in different directions, in addition to the steering angle. When the tires form an angle where the top of the two front wheels are slightly tilted inward, is called camber, see figure 7. Toe in is when the front of the wheels are tilted inward and toe out is when the back of the two wheels are tilted outward, see figure 8. The deflections are inevitable, but if they become apparent enough, they will cause increased friction and other disruptions.

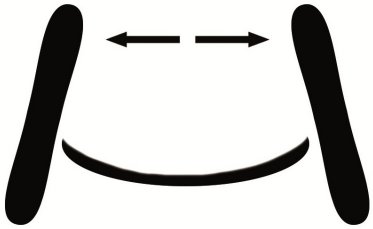

Figure 7: *An illustration of camber.*

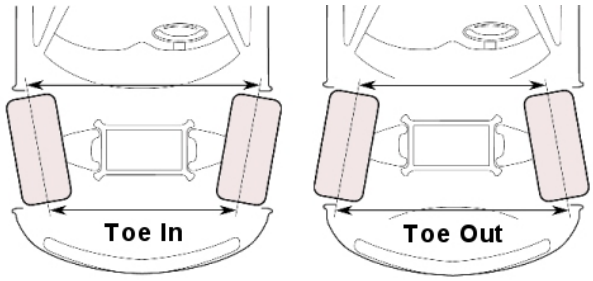


Figure 8: *An illustration of toe in and toe out.*

The measurements are made by using the distance sensor GP2Y0A41SK0F from Sharp, see figure 9 and appendix B.7. This sensor is also resistant to variations in temperature, moisture and mechanical shock. It is easily installed by mounting it on the frame and it measures the distance to where the light emitter and detector are directed. This Sharp sensor measures distances within the range of 4 cm up to 30 cm. As the data sheet implies, the sensor's accuracy is at its best when 7 - 9 cm from its target, where it is intended to be installed.

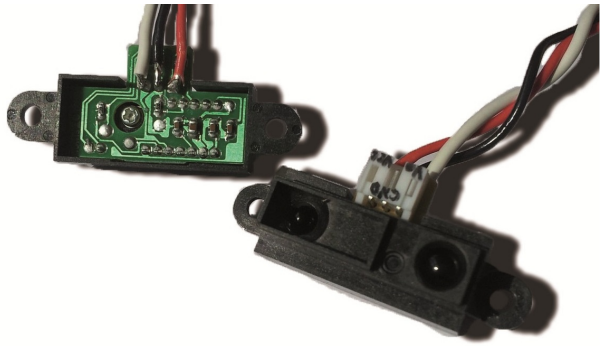

Figure 9: *The distance sensor Sharp GP2Y0A41SK0F.*

It is possible to install as many distance sensors as one would like, the only thing that prevents it is the lack of space and the tangling cables. The sensors require a lot of testing as well. The data is to be recomputed into values which describe how many degrees the incline of the wheels form, in relation to its centered position.

### 3.2.3 G-force acceleration

To save fuel during the race, Vera is repeatedly accelerated up to a certain speed and is then allowed to make as much use of the momentum as possible until the next acceleration phase. This requires the acceleration to be monitored closely and adds pressure to make it as efficient as it can be.

There Memsic 2125 Dual-Axis Accelerometer #28017, see figure 10 and appendix B.8, can be installed in the center of the vehicle to measure g-force acceleration. This sensor contains a small gas chamber with a heating radiator in the middle, and by measuring the temperature on the edges of this chamber it can calculate the acceleration along two perpendicular coordinate

axes. The Memsic sensor is capable of measuring tilt, collision, static and dynamic acceleration, rotation, and vibration.



Figure 10: *The Memsic 2125 Dual-Axis Accelerometer #28017.*

### 3.2.4 Engine chain tension

The engine chain tensioner makes sure that the connection between the parts of the engine remains intact, without them being overstressed. If the chain is pulled too tightly, the engine can be damaged and if it is too loose, the performance is lowered. It is useful to do testing that leads to finding a good setting for the tensioner.

To register and measure the movements in the chain tensioner, the linear image sensor IC Haus LFL 1402, see figure 11 and appendix B.9, will be used. There is room for this small sensor on a surface right next to the lever, which is fixed between, and moved by, both a spring and the engine chain, see figure 12. The sensor has an array of 256 active photo pixels with a high resolution and it is capable of receiving and processing an image of what is in front of it. The lever can be marked with a pattern which can be used to compute what position the chain tensioner is in. If the tensioner moves too much, it will have to be tightened.

This sensor is very accurate in relation to the method of measurement in which it is applied. Other methods of measuring movements in the chain tensioner would be to have sensors measure the elongations of the spring or the angle between the lever and its mount. There is however, no space available to install such sensors. The proposed method is relatively accurate and it is feasible.

Each pixel will produce a voltage that can be linked with a wavelength. The markings on the lever could for example form a bar code. The displacements in the received image is a measurement of the degree of which the chain tensioner moves.

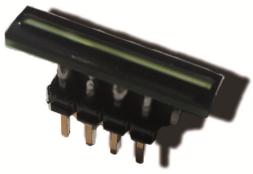

Figure 11: *The linear image sensor IC Haus LFL 1402.*

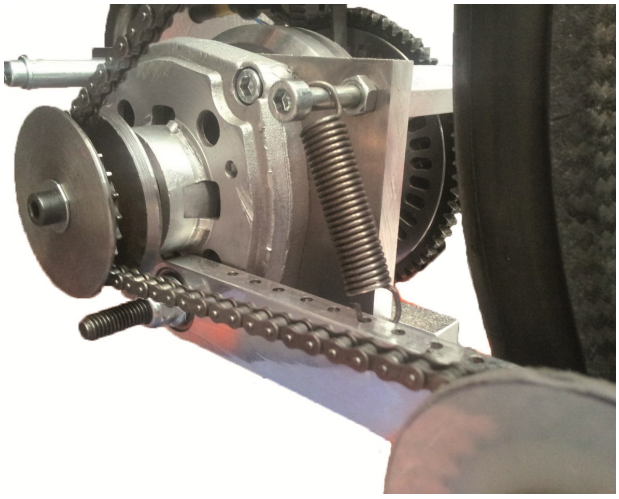

Figure 12: *The engine chain tensioner.*

## 3.3 Arduino -Microcontroller

To manage the collected data from the 13 sensors we choose to use the Arduino Micro microcontroller that includes 20 digital inputs/output pins where 7 can be used as a PWM, Pulse Width Modulation, outputs and 12 as analog inputs/outputs. This suits the task of be able to read all the sensors data and connecting the bluetooth-module, see appendix B8, used to transmit the data from the microcontroller to the mobile phone, and also be small and lightweight, only 6,5g, further minimizing the weight and space addition to the car. The wheel speed-, steering wheel-, tire pressure-, centripetal force- and the camber toe in/out-sensors are permanently installed and connected to the microcontroller while the wheel house airpressure-, strains in the framework- and the engine chain tension-sensor are only used during testing and not used when competing and therefore connected to the microcontroller with external contacts that can be removed easily.

The sensors are connected to the microcontroller as shown in figure 3, the three wheel speed sensors are connected to first three analog pins, A0- A2. A0 is connected to the front left wheel-, A1 to the front right wheel- and A2 to the rear wheel-sensors. The steering wheel potentiometer are connected to the analog input pin A3 and the 2 Kamber Toe in Toe out sensors are connected to the A4, left front wheel, and A5, right front wheel. The Centripetal force-sensor have two data values, the change in X-axis and the change in Y-axis, and are connected to the PWM-pins PWM5 and PWM11. The three wireless

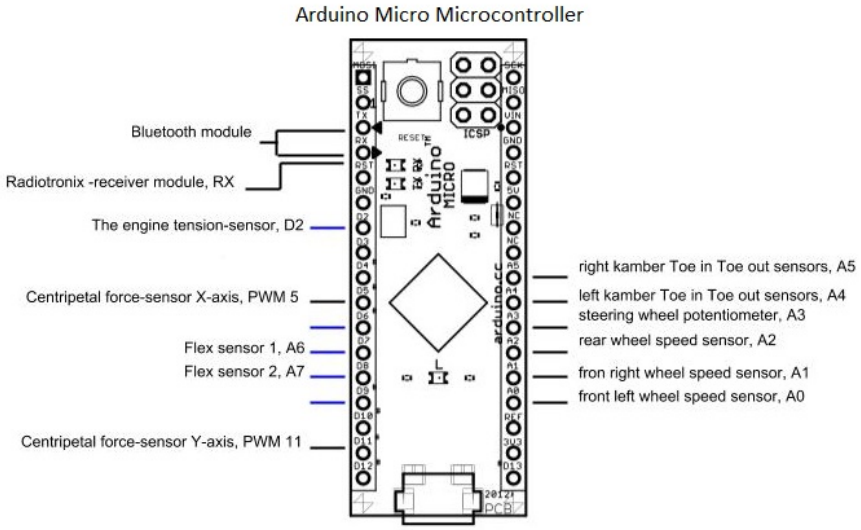


Figure 13: *Microcontroller connection scheme*

tire pressure sensors are connected to the microcontoller via the receiver module, Radiotronix RCR-433-MPR see appendix B.5, and are connected to the RX-pin. The external sensors only used for testing are marked with blue and are easy to connect and remove. The engine chain tension-sensor are connected to the digital pin D2 for digital input and output reading. The two flex sensors used to measure the strains in the framework are connected to the two analog input pins A6 and A7.

### 3.3.1 Data transfer from the Arduino to the Android-phone

The data transfer from the Arduino microcontroller to the mobile phone is based on the wireless bluetooth technology, which is a standard for transmitting data over short distances. The bluetooth protocol is split in to two parts where one part acts as the host-device, so called “host stack”, and is responsible for setting up and managing the connection of the two parts. The other part is the device that listens for the host-device to setup the connection, the so called “controller stack”-part. A bluetooth-module, free2move F2M03GLA see appendix B.10, are connected to the Arduino receiver and transmitter pins and acts as the “controller stack” part in the system. The smartphone acts as the “host stack” part and manages the connection between the devices.

### 3.3.2 Data transfer protocol

To manage the 13 different data values read from the sensors a protocol has been set up for the data packages transmitted between the Arduino and the smartphone. The protocol states that the data-package from the Arduino's bluetooth-module will contain three parts. It begins with a header part that states the beginning of the data package, followed by the payload holding the sensor data and lastly the tail part that states the end of the data-package, see figure X. The head of the package starts by sending a 2 bytes "PS" declaration to declare the beginning of the package and then followed by 1 byte number that give the number of sensor-data included in the payload. The payload carries the read integer data from the sensors in the order from 0 to 12, see table 1. The tail announces the finish of the package by sending a 2 byte "DS" end declaration.

Table 1: Payload data table

| Payload nr | Sensor | Payload nr | Sensor |
|---|---|---|---|
| 0 | Left front wheel speed sensor | 9 | Wireless front right wheel pressure receiver |
| 1 | Right front wheel speed sensor | 10 | Wireless rare wheel pressure receiver |
| 2 | Rare wheel speed sensor | 11 | Front left wheel house pressure sensor |
| 3 | Steering wheel sensor | 12 | Front right wheel house pressure sensor |
| 4 | Left front wheel kamber sensor | 13 | Rare wheel house pressure sensor |
| 5 | Right front wheel kamber sensor | 14 | Engine chain tension sensor |
| 6 | Centripetal force sensor X-axis | 15 | Flex sensor 1 |
| 7 | Centripetal force sensor Y-axis | 16 | Flex sensor 2 |
| 8 | Wireless front left wheel pressure receiver | | |

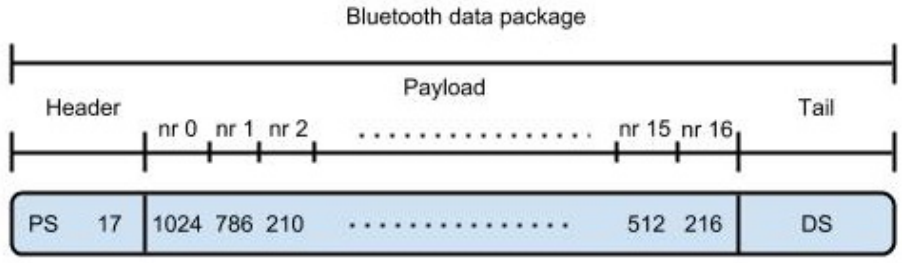


Figure 14: *Bluetooth data package*

### 3.3.3 Arduino program

The Arduino Micro microcontroller programming language is based on the C/C++ language and links to the AVR Libc, an API package that provides a subset of the standard functions from C for 8-bit microcontrollers. The program starts by declaring and setting the input and output pins to each sensor connected to the microcontroller according to figure X followed by the initialization of the bluetooth serial input-/output stream. It then connects and sets up the receiver to the wireless wheel tire pressure sensors. The program then starts to loop through the connected inputs and stores the value from each sensor every 20ms. When the program have read the values from one loop it compiles the data to a data package according to the protocol and sends the package over the bluetooth connection.

# 4 Mobile Application

The mobile application is the core module throughout this project. The fundamental idea is that the smartphone itself is a substitute to a computer. Its main purpose is to transfer data from the ECU to the web server. Later on, the information will be displayed in a desktop program. Besides transferring data, the application works as a dashboard for the driver, presenting important values related to the run.

## 4.1 Layout and Design

First and foremost the application is designed to be practical. The application's main functions need to be easy to operate for the driver while driving, wearing gloves. Therefore the most important recommendation given in the Android Developer Guide has been "Only show what I need when I need it" (Android Developer Guide, 2013a). To ensure that only the most important information is presented, a close communication has taken place between the software developers and the Vera Team. It is crucial when designing an application to always have the user in focus (Android Developer Guide, 2013a).

It should be noted that even though the application should be handy to use, a beautiful design is important to create confidence in the application and make it pleasant for the user to look at.

### 4.1.1 Start- and Run-view

The first thing that meets the user when starting the application is the start view illustrated in figure 15. When the user presses `Launch` on the screen, the run view appears. Thereafter, the search for a GPS signal starts, which can be seen in figure 16. While the application is searching for a GPS signal the `Start` and `Stop` buttons are inactivated. As soon as the signal is found the application displays the message in figure 17. The `Start` button is at the same time activated. As the user pushes start, when the race starts, the application can present the view as in figure 19. Also, the stop button is activated and the resume button inactivated.

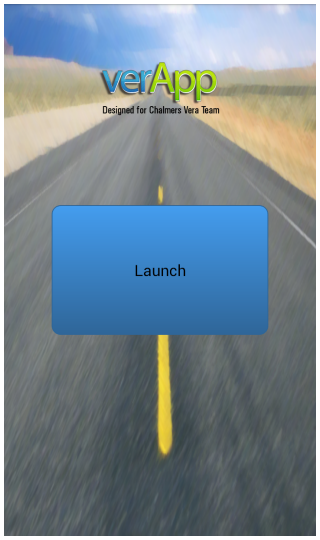


Figure 15: *Start view*

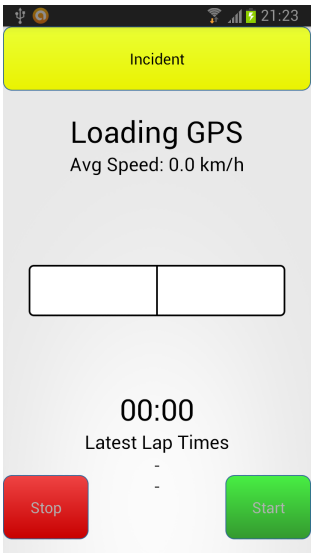


Figure 16: *Searching for GPS signal*




Figure 17: *GPS signal found*

The run-view contains three buttons. The buttons are placed far apart in order to avoid that the user presses the wrong button by accident. The `Incident` button is supposed to be pressed when something particular occurs and will be described more in detail further on. The `Stop` button pauses the timekeeping and the logging. The `Start/Resume` button starts/resumes the loggi ng and timekeeping. When any of the buttons has been pressed the user is presented with a confirmation which can be seen in figure 18.

The colors of the buttons at the run view are chosen according to the current cultural stereotypes in the western world. The `Incident` button is yellow which symbolizes warning. The `Stop` button is red which symbolizes stop and the `Start/Resume` button is green which symbolizes go and resume (Bohgard et al. 2008, pp. 390). To avoid misunderstanding, colors shall never be the only thing providing information. The buttons are therefore provided with a label stating their function [1]. The white background makes it easy to see the information on the screen and also helps the user distinguish the buttons.

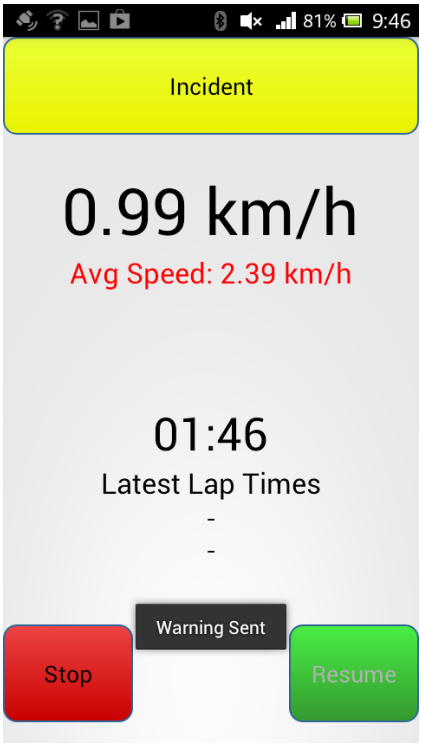


Figure 18: *Confirmation that a button has been pressed*

In the center of the screen the user is presented with the current speed of

[1] Jonas Andersson Ph.D. Student Chalmers, lecture 2013-02-18

the car, the average speed throughout the whole session, the lap time which presents the time of the on-going lap and further down on the screen the driver can see the lap times of the previous laps. On the screen the total time of the race is also presented. In the center of the screen there is a bar with a steering indicator. The indicator shows the driver which way and how much the steering wheel was spun. The color of the indicator changes in accordance with the fact, if the steering was within accepted values.

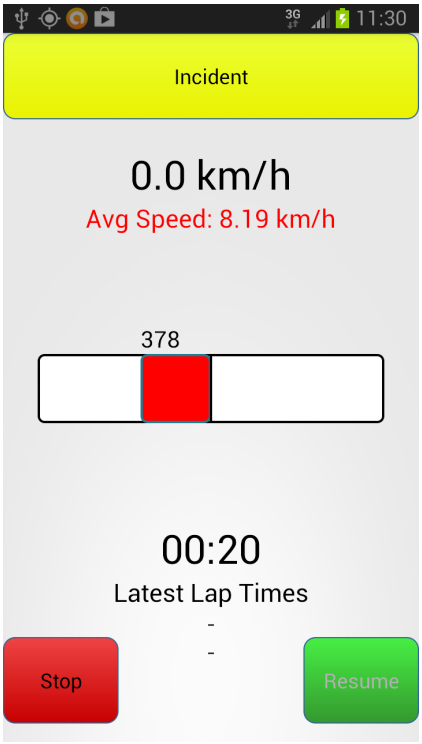


Figure 19: *Run view*

When developing an interface it is important to take into consideration that the user might click on the screen by accident.[2] To ensure that the back-arrow hasn't been pressed by accident the user is presented a dialog box asking "Are you sure you want to go back?". This action is implemented in all views in the application. The dialog box can be seen in figure 20.

Since the use of the application is limited to the time when the smartphone is placed in a carrier, the application is designed to portrait mode which means it's standing up horizontally. Therefore the landscape mode has been

[2]Jonas Andersson doktorand Chalmers, lecture 2013-02-18

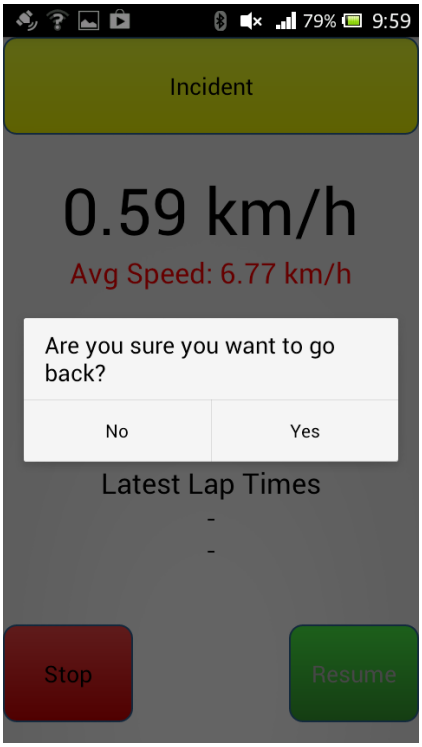


Figure 20: *Dialog box to avoid user mistake*

disabled in order to avoid potential frustration of the user in case the cell phone goes into landscape mode when accidently tilting the cell phone.

### 4.1.2 Action bar and Settings

In accordance with Android standard the back arrow at the button of the screen is used to go back to previous screen. The options menu should contain actions which effects the app globally (Android Developer Guide, 2013d). In VerApp the options menu contains the actions `Reset`, `Settings` and `Exit` as illustrated in figure 21. The first option, returns the user to the start screen and by doing that resets all calculations in progress. The second option, will be will be described further on. Finally, the third option, `Exit`, closes the application.

The settings menu is developed with the vision of making it expandable. It means that even though the Settings menu today only contains a menu with one item it should be easy to add more items to the menu in the future. The

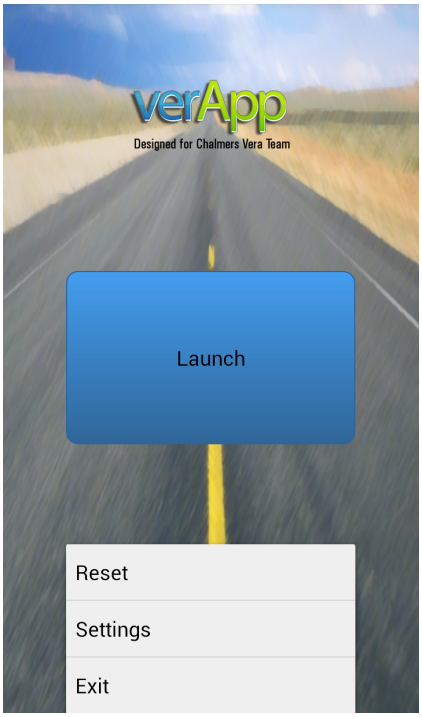


Figure 21: *Options menu*

settings menu has been developed according to the design recommendations for Android. The recommendations state that settings for an application should be accessed through the options menu (Android Developer Guide, 2013d). Consistent with the recommendations to make the settings menu and therefore the application easy to use, the user is not given options in the settings menu that aren't necessary. (Android Developer Guide, 2013d) The settings menu is illustrated in figure 22.




Figure 22: *Settings menu*

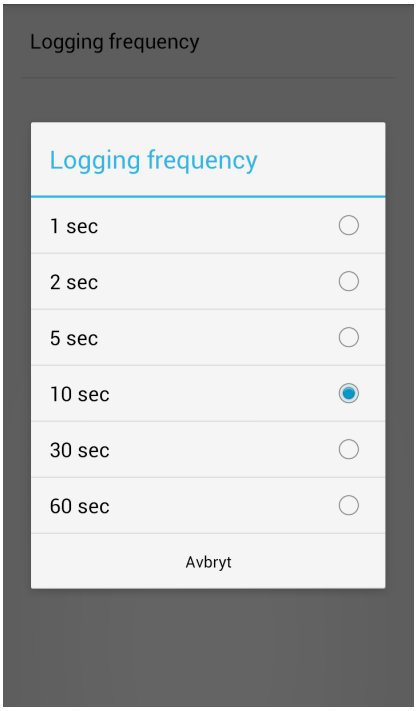


Figure 23: *Logging frequency option*

In an early stage we thought it'd be a good feature to let the user chose the logging frequency. Therefore we implemented it as an option in the settings menu, whereas the user was presented with a dialog box containing available logging frequencies which is illustrated in figure 23. The options had radio buttons since only one logging frequency could be chosen. (Android Developer Guide, 2013e)

Another recommendation that has been taken into consideration while making the settings menu was to keep it brief. This is particularly important in this application since it is being designed to be used by a small group of people for which it is more important that the application is fast and perspicuous than easy to use for a beginner.

Finally the settings menu is designed in a way that enables it to remember the user's choice even if the user exits the application. (Android Developer Guide, 2013e) By designing the application this way, the user only has to set the settings once and can thereafter start using the application immediately the following times.

### 4.1.3 Application icon

Throughout the project, it has been a goal to follow the creative vision of Android which emphasizes the importance of a good app icon (Android Developer Guide, 2013f). The icon can be seen in figure 24.The icon has a green background to remind the user of the fact that the environment has a central part in the project. The green color is also convenient since it works well with a big variety of backgrounds. The wheel is to symbolize that the application is to be used with a vehicle. To make the icon more conspicuous it has been given a round shape (Android Developer Guide, 2013f).



Figure 24: *App icon*

## 4.2 Functionalities

The mobile application has two responsibilities: transferring data from the ECU to the web server and work as a dashboard. As previously described, the application displays total race time, steering, speed, average speed and lap time. The three last mentioned functions are solved with the help of GPS. The GPS is also used together with the logged data for better understanding when reviewing the information. Another part of the application is the storage on the phone while the data has not yet been transferred to the web server.

### 4.2.1 Global positioning system

Global positioning system, or more commonly known GPS, is used to solve several functions in the app. GPS equipment uses satellites to determine it's position. GPS is very reliable and works in all weather conditions anywhere in the world, at any time. With the help of GPS it is possible to determine the user's latitude, longitude and altitude. Once the user's position is set, the GPS can calculate things like bearing(direction), track, trip distance, distance to a given position, sunrise and more (Garmin, 2013).

Most new mobile phones, including the Sony Xperia Sola used for this project, support GPS. Most use a technology similar to GPS called A-GPS (Assisted Global Positioning System) (Sony Mobile, 2013). The difference between A-GPS and GPS is that A-GPS uses the mobile network while GPS communicates directly with the satellites. A-GPS is more suitable for mobile devices since the amount of programming and CPU power required is reassigned to the assisting servers. Some of the downsides with this is that the user has to pay the phone service provider for the amount of data usage. In practice A-GPS is often less accurate (Tech2, 2013).

To use the GPS in code, Android's `LocationManager` is implemented in a class called `GPSManager`. `GPSManager` handles all necessary functionalities that comes with GPS. As soon as the GPS has a signal, each signal update triggers a method inside run view which receives the latest position. To get the GPS working on Android the application needs to have permission to `ACCESS_FINE_LOCATION` which gives the most precise position from sources such as GPS, Wi-Fi and cell towers. This connection is not always working,

therefore, as a precaution, `ACCESS_COARSE_LOCATION` and `INTERNET` permission is also granted. The last mentioned gives access to a approximate location from network sources such as Wi-Fi and cell towers (Developer Guide, 2013b). The app is designed so that it's possible to run without access to GPS.

### 4.2.2 Run view

The run view is the central activity in the application. It's present most of the time for the driver, calculating and displaying important values during the race.

As soon as the GPS has allocated a signal the `Start` button becomes available. When the race starts the driver pushes the start button which thereby starts a timer and ECU communication.

One of the most central methods inside the class is `onGPSUpdate` which always receives the most recent location. The first position that is received is saved as the starting point. This position is later used to determine a new lap. All lap times are saved, even though, only the two latest lap times are present for the driver.

The new lap feature was originally estimated in a different way, namely by taking the start position and it's course. By subtracting and adding 90 degrees to the initial course and finally adding 10 meters in each direction it's possible to form a straight line. This line would represent the start/finish line. Then, for each new GPS position that was received a method would check if the current the direction of the car would intersect with the finish line. As a precaution, the method would also check so the car was in a radius of 10 meters to the finish line. Figure 25 illustrates the described approach.

The first attempt didn't work as planned, in fact, it didn't work at all. However, a second attempt was made and included a much simpler solution. The heavy mathematical part was discarded and the new calculation used only the distance to the starting point. With help of testing and with respect to the GPS accuracy we found that a 10 meter radius would still do the job. Also, a thread, running concurrently was added, which would lock the lap counter when recently updated. This would ensure that a single lap only is

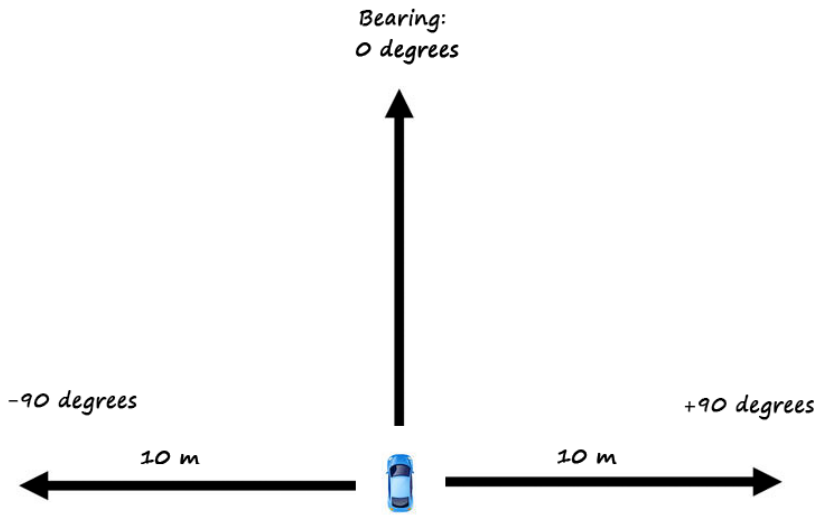


Figure 25: *First attempt to calculate new lap*

counted once. The second attempt showed off well in tests and is the current solution that is beeing used in the app.

It is of great importance for the Vera Team to know the speed at all times. The speed is handed to the user by the `Location.getSpeed` method. This method is a part of the `LocationManager` by Android. Since the speed is initially in meters per second the value has to be converted before printed to the textview(Android Developer Guide, 2013g). The average speed is estimated with the help of the formula (1).

$$\frac{total\ distance}{total\ elapsed\ time} \tag{1}$$

The total distance is estimated by the distance between the second latest point and the latest point. As mentioned before, the A-GPS is not always completely accurate and might get the idea that the object is moving when it's not. The difference in coordinates very small but enough to trigger the whole system. A problem arose from the scenario above when determining the total distance. The solution was to put the calculation inside a separate running thread. Instead of logging for each triggering signal the thread forces it to execute every two seconds. In practice two seconds is a lot compared to

the actual frequency if the calculation would be in the `onGPSUpdate` method.

During the race unforseen conditions might occur, the possibility to stop and resume run mode is available at all time. This means that if the driver would push `Stop`, all related functions are effected. To be even more precise, a flag named timeIsRunning is set to false which implies that average speed, lap time, total time, data logging and current speed is paused. However, the current value for each is stored.

The application is also logging data during runtime. If something occurs during the race it might effect the logged data. This could be hard to backtrack after the race. As a consequence of this, a button called `incident` has been implemented which gives the driver the opportunity to report something unexpected. This is done by setting a warning flag to true which is sent along with the data logged at the same time.

There are three more buttons which haven't been covered yet, the reset, back and exit. Reset basically returns the user to the initial view. By doing this the run view is destroyed and all variable values are wiped away. Back button simply forces the current activity to finish. Which activity that should be displayed afterwards is handled by the operative system. As there are multiply threads running it is of great importance to the phones performance to kill all threads and that's exactly what the exit function does, causing the application to shutdown. Since these are core features that should be available in the whole app, all three are implemented in the base activity class which is a super class to all other activities in the app. The base class itself inherits from `Activity`, which is the class provided by the API.

There is is no indicator like the one used in this project in the Android API which meant it had to be built from the ground up. The indicator is implemented by putting rectangles upon each other. The size, color and placement of the front rectangle are then changed according to the steering. A line has also been put in the middle to help the driver distinguishing if the front rectangle is to the left or to the right. The background rectangle with the line in the middle can be seen in figure 16. To make the size of the rectangle proportional to the steering equation (2). In the equation `steer` is the steering data received from the sensor, `nomSteer` is the nominal steering signal i.e. the signal then the car is going straight forward, `width back rect` refers to the width of the background rectangle and `maxSteer` and `minSteer` refers to the maximum and minimum steering signal possible.

$$\text{width front rect} = \frac{|\text{steer - nomSteer}| \cdot \text{width back rect}}{maxSteer - minSteer} \tag{2}$$

A listener has been implemented which listens if the steering variable in the program is changed. In the case that the steering variable is changed, the appearance of the front rectangle is updated according to its value and the value of the steering is put at top of the bar which can be seen in figure 19.

### 4.2.3 USB Connection

To connect the smartphone to the ECU, the Engine Control Unit of the car, see 2, we choose to use the mini-USB connection on the ECU box and connect this to the micro-usb on the smartphone. The USB, Universal Serial Bus, is an industrial standard developed to define a joint interface for cables, connectors and a communication protocols between electrical devices. The USB standard states that for a interaction between devices to be possible, one have to claim and act like a USB host and the other have to act like a USB device. In our case our destined phone, Xperia Sola, takes the part of acting as the USB host device and thereby setting up and initialize the communication over the USB bus. The ECU, SA3000 from Civinco, connected to the engine in the Vera car will act as a USB device and active listen after instructions from the phone on the connected USB bus.

For the application to be able to setup and initialize the connection over the USB hardware, the Android operative system have included a `USB Host API` (for Android versions over 3.1) that provides support for communications with connected USB devices (Android Developer Guide, 2013i). The application sets up the communication to the ECU using the classes in the API, the VID, vendor id, and the PID, product id, that is the device identification number for the ECU. The connection is established at the beginning when the application is started and the communication between the phone and the ECU is open and idle for command. When the start button is pressed the program sends a start command, see section 2.2 Data transfer protocol, to the ECU and start a input stream of logged data from the USB bus to the application storage file.

### 4.2.4 Bluetooth Connection

The connection between the smartphone and the microcontroller, see section 3.3, is managed by a wireless bluetooth connection. The bluetooth connection is a wireless standard technology for exchanging data between devices over short distances and is supported in the Android OS. The application uses the standard Bluetooth API (Android Developer Guide, 2013j) to set up the framework and control transfers over the connection between the smartphone and the bluetooth module connected to the microcontroller. The bluetooth connection is established when the application is started and the serial input/output stream is open and idle for transmission. When the applications start button is pressed a signal is sent to the microcontroller and the data package flow from the microcontroller, see section

### 4.2.5 Storage

After the signal is received from the ECU, the application tries to transfer the signal to the web server as soon as possible. This is not always doable due to the fact that the connection may not be available or there are several files waiting in queue to be transferred. Therefore it is important to store the file, at least, until it is possible.

The first implementation was done with a SQLite database which is the internal database in Android. By using a relational database system it is easy to organize all the data. Also there are significant advantages in speed and efficiency when retrieving large amounts of records from a SQL database(Illinois Institute of Technology, 2013).

Due to the amount of data being logged, the way of sending each signal value with related parameters one by one was dumped since it lacked of efficiency. Instead the logged data is written directly into a text file. The text file has been assigned a maximum size of 30 kB until the file is closed and the application starts to write to another text file. Once the file is complete, it is compressed into a zip file. By doing this reduces the file size from 30 kilobytes to approximately 900 bytes. Finally, the zip file is placed in a folder called `waiting`, more about the folder name in 4.2.6.

### 4.2.6 Transfer of logged data

When the logged data has been collected and packaged into .zip files there is time to transfer the file to the web server where it'll be unpacked and processed.

To transfer a .zip file there is a class called `FileManager` which is responsible for only sending the files. The class itself is asynchronous and has a somewhat odd behaviour compared to other classes in Android. For starters the class is always called through it's `excute()`-method and a new instance has to be created for each method call. The advantage is that it's possible to run tasks, like the transfers, through the user interface thread (UI thread is the main thread for execution) in the background. This approach eliminates the need of using threads and also simplifies the implementation. When the `FileManager` class is invoked it first checks that all necessary directories exist and create any that have yet to be created. Soon as the right file is located it's sent to the web server through a `POST(HTTP)` method. For it to be possible to transfer a whole file the content-type needs to be set to `multipart/form-data` (W3, 2013).

When a race proceeds there might be hundreds of zip-files in the memory which are waiting to be transferred. An important part is to keep track of which files have been sent and which have not. This was first implemented with a text file that kept all names of files that have been sent and for each new transfer the class would check whether the file had been sent before or not. However, this caused an error which made the application crash. The problem will be discussed further in 7.3.3.

The solution that is currently active in the application is executed according to the following specification. Instead of using the local database, the files are compressed and saved into a directory which is called `waiting`. The directory contains all files that have not yet been sent. Since the data is labeled with a timestamp it doesn't matter in which order they are sent. As soon as the application has received an OK message from the server the file is transferred to another directory called `sent`. With this method it's possible to lower total transfer time, amount of code, storage space and memory usage.

# 5 Database

The initial plan for storage of log data was to only use a local database on the smartphone. The idea was to use an SQLite database since Android has native support for it. Originally the project only concerned local logging of data, but as the project expanded a decision was made to utilize an external MySQL database stored on an external web host.

## 5.1 Database modeling

The model was initially drawn on paper and translated into SQL statements for creating the MySQL database. After creating the database some arbitrary datapoints were inserted to allow for initial testing of the desktop application.

## 5.2 Data transfer to database

Data is sent from the smartphone in the form of a compressed .txt document containing logged data from both the ECU and external sensors. One such document is created every 5ms. The data is transferred using a PHP script which decompresses, parses and converts the data (see 5.3) into physical values. The converted data is then inserted into the database using SQL statements.

## 5.3 Conversion to physical values

When the data is logged in the ECU (Engine Control Unit) no consideration is taken to the fact that different parameters have different units which works differently. E.g. ignition is in degrees, frequency in Hertz and fuel consumption in liters per 10 km.

In order to do this conversions the group was provided with a Matlab-script by Civinco (the manufacturers of the ECU) which describes how this conversion could be done. The group decided to rewrite the script in PHP instead. Since all the data in the log file is not useful it is of interest to delete useless

data as early in the transfer process to minimize the amount of data being sent. The reason the calculations are not made on the Smartphone is that the web server has a lot more capacity. Civinco also provided the group with `ROWDEF-`,`SENSDEF` and `TEMPDEF` files which will be explained later on.

The script begins with that the `ROWDEF-`, `SENSDEF` and `TEMPDEF` files are read and their content put into matrices. The `ROWDEF` file contains row definitions, `SENSDEF` contains sensor definitions and `TEMPDEF` contains temperature definitions. In order to find a certain parameter in the `SENSDEF` and `TEMPDEF` file the program uses the `ROWDEF` file to find at which row the relevant parameter can be found in the actual file.

Secondly the file containing logged data sent from the Smartphone is read and put into another matrix called it `DATA` matrix. Before putting the data into the matrix, the program finds the beginning and the end of the logged data and erases the rest.

Then the ECU is logging it assumes that all parameters are linear which is not the case. If a parameters is defined as `L2C` (Linear to Circular) in the `SENSDEF` file the physical value might actually be negative. The physical value of all parameters (except temperatures which has a nonlinear behavior) is linear and are therefore calculated as equation (3).

$$\text{physical data} = \text{logged data} \cdot \text{constant} \cdot \text{factor} + \text{offset} \tag{3}$$

The factor and offset can be found through different columns in the the `SENSDEF` matrix. The temperatures are calculated using the `TEMPDEF` matrix.

## 5.4 Transfer from a web server

As stated in section **??** the system uses a MySQL database hosted on a web hosting service. The initial plan was to have the desktop application communicating directly with the database and code was written to fulfill this purpose. During the first phase of testing, a local MySQL server was used and the developed implementation was fully functional. However, due to the web host not allowing external connections directly to their database server a workaround was created in the form of a PHP script which creates an XML document using the logged data in the database.

# 6 Desktop application

Originally, a desktop application was not part of the assignment even though the group realized that an intermediate layer would have to be implemented for processing the logged data into a format that the existing software could use. After a few weeks of work this was expanded to a full desktop application as the software provided by Civinco, developed for use with their ECUs, was found to not provide the functionality needed when logging data in real-time. The purpose of this new application is to retrieve logged data from a web server, process it and present it in a clear and concise manner.

The application was developed using the Java programming language and specifically the Swing framework as well as a few external libraries for drawing maps and charts, something that Java has no native support for. The choice of language and framework was made based on previous experience of the developers to facilitate a smooth development process.

## 6.1 Development process

The initial plan was to develop the application using scrum which would allow for changes to the application's design during development. Due to unforeseen changes in the group configuration this was not realized and no strict development paradigm was followed.

## 6.2 GUI design process

While designing the GUI paper prototyping was used fairly extensively. The goal was to create a very simplistic interface with minimal clutter. Civinco's old software was used as a model for the design with the aim of creating a familiar design that the Vera team wouldn't have any problems getting used to.

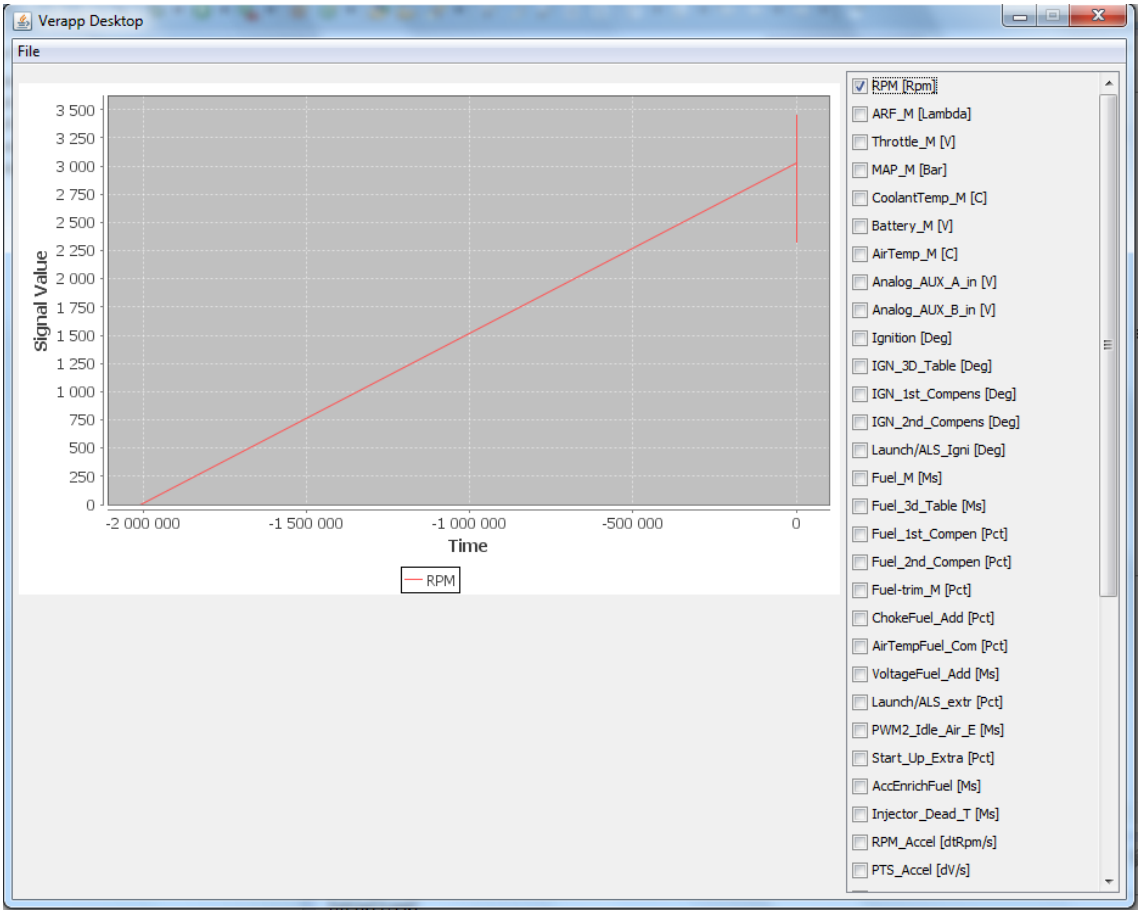


Figure 26: *Screenshot of desktop application. Note that this is from an early version, before logging was implemented correctly.*

## 6.3 Implementation

The implementation was split up into a few parts; connection to webserver and collection of data, parsing of data and presentation of data using a graphical interface. The actual code was written with these fairly distinct parts in mind and has been split up into packages reflecting this fairly well.

### 6.3.1 Web connection and collection of data

Logged data is initially stored in a MySQL database located under our web host, however, as the host does not allow external queries to be made to

their databases a PHP script was created to convert the database entries to an XML file for the desktop application to access.

Connection to the webserver is established using Java's native URL class which provides an easy-to-implement interface to web resources using the HTTP protocol. After a connection has been made a continuous stream of data is received and processed.

As soon as a connection has been established the application retrieves data at an interval specified by the user. A drawback of allowing the user to pick the interval is that the application isn't able to find out how often data is uploaded to the server which could lead to the application retrieving the same data multiple times.

### 6.3.2 Reading existing logs

As per the Vera Team's request the application also lets the user view data from previously saved logs. These are stored and parsed in the same manner as live recorded logs which allows the feature to be implemented with mainly existing code.

### 6.3.3 Parsing

The data, which is stored in the XML format, is processed using the DOM model instead of the perhaps more commonly used SAX. The main difference between DOM and SAX is that DOM reads the entire document and loads it into the memory while SAX reads the document sequentially. Due to this SAX potentially has higher performance at a tradeoff of having a larger overhead. The decision to use DOM over SAX was made mainly due to it being easier to use and implement as well as the relatively small size of the documents in question.

Using the previously mentioned DOM the document is processed and split into individual data points which contain data about signal value, GPS coordinates as well as a timestamp of when the data was recorded.

### 6.3.4 Threading

The application was implemented using multiple threads to allow for real-time updates of the model and GUI as new data is logged. Not using threads would lock the application in terms of user interaction which is obviously not acceptable.

### 6.3.5 GUI

The GUI was implemented using the previously mentioned Swing framework as well as the external libraries JMapViewer as well as JFreeChart. Swing was used for creating the overall structure of the GUI as well as some of the graphical elements featured in the interface. In addition to this, JFreeChart is used to create charts and JMapViewer is used to create visual maps showing the route taken by the vehicle.

The user is able to choose from a list of parameters corresponding to those logged in the ECU. When one is selected a chart and map is drawn containing all data points associated with the chosen parameter. The chart and map is dynamically updated as parameters are selected and deselected.

# 7 Discussion

The project has not been implemented without neither issues nor lessons. A lot of things have caused problems but most of them have been solved. Solving these issues has given new knowledge, but things that were not problems could in retrorespect have been solved in a better way. In this section some of the problems encountered and lessons learned will be discussed in further detail.

## 7.1 ECU

When we first got the task of reading data from the ECU we started to research information about how to use the Android operating system to set up a USB connection between the smartphone and ECU interface. The research resulted in information from the Android Developer Guide stated that USB host mode, a requirement to be able to establish a connection between two or more devices, was directly supported in the Android versions from 3.1 and above throughout the USB API library. This resulted in a decision to choose the reasonably cheap, small and light weight Smartphone Sony Xperia Tipo which supported Android 3.1 with support of the host mode API.

When we received the phone and started the development of the USB connection communication, we soon realized that even though the Android operating system on the Smartphone supported the USB host mode the Smartphone's hardware configurations and kernel did not.

A long process of trying to reconfigure the kernel to support the USB host-mode was started. This was almost accomplished but not reliable since the configurations stopped working and refused the connections at seemingly random occasions while running. In the fourth week of the project we gave up the reprogramming of the kernel approach and started looking in to other Smartphones, now at a higher price level, that supported both the Android version 3.1 and the hardware kernel configurations needed. This resulted in the Xperia Sola Smartphone from Sony at twice the price.

This taking a lot of time to gain insight into resulted in a big delay of the whole project. As this was the key part and the main task of the project this affected all parts and group members in the project. When receiving the

Xperia Sola Smartphone we were able to set up and initialize a communication with the ECU and start extracting log data. This log data have been generated from a test bench and is not from the actual Vera car's engine since the team have not yet installed the ECU box type we been working with, the Civinco SA3000 in the car.

When conquered the first big problem of the ECU communication the next problem occurred. The ECU boxes are designed to use the Civinco software program to collect data and request commands to and from the microprocessor inside the box. This resulting in very little information on how the communication protocol was formed and how to talk and interpret the data return from the ECU. We approached this problem by listen and analyze the traffic over the USB-bus with a USB protocol Analyzer box and tried to backward engineer the communication while using the Civinco software program and sending requests to the ECU.

This approach was abandoned due to the amount of data and controltransfers sent at a high rate over the USB-bus where making it impossible to solve the problem this way. After consulting Markus Ekström from Civinco several times on the phone and getting good advices and help we managed to understand the communication protocol and the framework of the data-packages sent to and from the ECU. This resulting in a fully established communication between the smartphone and the Civinco SA3000 Engine Control Unit via the USB interface.

## 7.2 Sensors

The sensor part of the project initially demanded a lot of time for research. There were difficulties in finding the sensors that were required. Some of these difficulties were due to that the right type of retailers are hard to find, their websites are tricky to navigate, it is difficult to distinguish which of the sensor's characteristics that are important for the context and keeping in mind that the customer has to be satisfied while at the same time the system may not become too expensive or difficult to install.

It is important to have good communication with the customers as early as possible and be prepared for them to either change their preferences or that there may occur misunderstandings about what is desired. One has to be able to communicate even though you have different technical knowledge.

Some of the sensors we wanted to install we did not get, because together with all the parts of our project it would have been to expensive. For instance, we did not get the tire pressure sensors or as many distance sensors as we wanted. As it is now, we can measure the camber but not any ”toe angles”. A three axis accelerometer would have been more ideal to this project and it would have given the Vera team more information of the g-force acceleration in the curves, working in direction towards the two front wheels. The two axis accelerometer would have to do, at least it shows the acceleration in a plane parallel to the ground.

## 7.3 Mobile application

The group members in general had no or very little experience of working with developing Smartphone applications and Android programming. As result of this the group ran into many unforseen problems. The following section will contain a description of the most significants problems encountered.

### 7.3.1 Graphical User Interface

When developing the application's graphical user interface it was important that the application would be easy to read while driving as well as easy to operate, even while wearing gloves. The phone to be placed in the car was a Sony Xperia Sola but since this phone was the only phone allowing host mode it was being used to study the communication with ECU and the development of the GUI therefore had to take place on other phones. The fact that other phones with a different display size were being used to develop the graphical design resulted in things that looked good on the phone used to develop the graphical design could sometimes end up looking bad on the Xperia Sola.

Initially a settings menu was added which was previously described. However, at the end of the project we came to the conclusion that choosing logging frequency was not a necessary feature. This decision was taken due to the fact that even when logging at the highest frequency there was such a small amount of data being sent that it did not cause any problems. For the user it is preferable to have as high logging frequency as possible and since it did not cause us any problem offering the user the highest logging frequency available

we did not see any reason to give the user the possibility of choosing a lower logging frequency.

The steering indicator provides a graphical illustration of the steering value. In order to do that it needs to get a value from the sensor. Since it has taken some time to get the sensor in place and the data from it into the cell phone it has not yet been possible to test the indicator under its normal conditions.

### 7.3.2 Calculation of a new lap

As mentioned in the section 4.2.2 there have been two attempts to calculate the lap time whereas the first one did not work at all. Since the earth is not flat there is the mathematical part in which much time were spent. We believe that the first attempt required some very precise data from the GPS unit. and we have come to the conclusion that this could be the part that caused failure.

In the second attempt we narrowed down the solution to only watch if the car would be in range for the starting position. If that was the case, increase lap counter, grab lap time and lock the counter for 5 minutes. The margin of error might sound much with 10 meters to spare but for this app it is acceptable. Let's say that the car is travelling in 25 km/h, which is the minimum average speed through the race and the new lap code is triggered on the edge of its maximum (10 meters from starting point). This scenario would give an incorrect value of 1,44 seconds. Since Shell Eco Marathon is not about getting the best time, the faulty of 1,44 seconds is acceptable.

### 7.3.3 Heap size error

Problem was encountered when trying to send the data from the application to the web server. As mentioned in section 4.2.6 several attempts were made. The first one was implemented with a text file that kept all names of files that have been sent and for each new transfer the class would check whether the file had been sent before or not. This caused the heap to run out of memory. The `execute` method was run from an infinite thread. As the application was running, hundreds of zip-files were created and the class would list the whole folder repeatedly. At last the memory did not stand a chance, which

caused this error. The current solution can be read from the same section as the second attempt.

## 7.4 Database transfer

The database, and all transfers to and from it has caused a lot of problems during the entire projec . To begin with, we chose a hosting service that did not allow an extern connection to their database server. That is something that we should have confirmed before choosing one.com as the service to go with. We spent a lot of time developing an SQL-parser in Java that ended up being discarded.

Another big issue concerning the database transfer was that no clear decision on how it was supposed to be done was made. It was not up for discussion using a zip file and a zip parser during the first half of the project time but at the end we came to the conclusion that this would be the best option. Some more research should have been performed at the beginning of the project and a clear path should have been chosen. If that would have been the case, problems such as zip-parsing and data-conversion, could have been solved earlier.

## 7.5 Desktop application

While the development of the desktop application was perhaps the smoothest, it did have its share of problems. These did, however mainly come from other parts of the project being held up for various reason which meant that the desktop application was not able to be sufficiently tested early enough.

### 7.5.1 Lack of testdata

One major problem faced during development was a lack of real testdata. This occurred due to data collection from the ECU becoming a bottleneck. This problem propagated to other parts of the project as testing was severely delayed. Throughout the project the desktop application was solely tested using dummy data which was manually inserted into the database using the

web host's own tools. While this was sufficient for making sure the XML parsing worked correctly it did not allow for testing of real-time logging. This lack of test data pushed the testing into the very end of the development process which was problematic as this could be seen as one of the very core features of the system.

### 7.5.2 GPS Plotting

Restrictions in the API used for drawing maps (JMapViewer) led to the plotting of GPS coordinates ultimately being cut from the application. The plan was to use the GPS coordinates to allow the team to compare signal values not only to specific points in time, but also to geographical location. In the end, as stated previously, the API used did not support this in a satisfactory way leading to the feature not being fully implemented. There is however quite a bit of code written which means that it would probably be fairly easy to either implement without an external API or if API is found that better supports the needs.

### 7.5.3 Warning flags

Since GPS Plotting was cut, we decided to cut the warning flags as well. The flags were supposed to be connected to each data point but since we couldn't figure out a smart way to plot the points there was no point for this. Another reason for this idea being cut is the fact that we chose to plot the data points in a chart. If we would've done some kind of list instead this could've easily been implemented. Although, we chose to send the warning information all the way to the desktop application. This means that no other changes, except from GUI changes, have to be done to implement it in the future. Both we and the Vera team wanted this feature so it's a shame that we didn't find any good ways to implement it.

## 7.6 System in total

The project has consisted of many parts which have been developed rather independently but at the same time strongly depend on each other: the ECU, the DAQ (Data Acquisition System), the mobile application, the web

server and the desktop application. The system can be illustrated with figure 27. To the far left in the picture are the engine and the sensors. The data goes into the engine control unit (ECU) and the data from the sensors goes into an Arduino micro controller. This far the data from the engine and the DAQ (Data Acquisition System) has been transmitted in two parallel processes but thereafter the information from both systems converges in the Smartphone. The ECU communicates with the smartphone via a USB wire and the Arduino communicates via bluetooth.

In the phone, the data from the ECU, the data from the Arduino and the data from the smartphone including e.g. GPS coordinates are written to a text file which is compressed and sent to the web server. On the web server the file gets uncompressed and the data from the ECU and is recalculated to physical values before the data is once again written to a text file. Finally the new text file can be fetched by the desktop application which presents the data in relevant graphs where the user can choose which parameters to display.

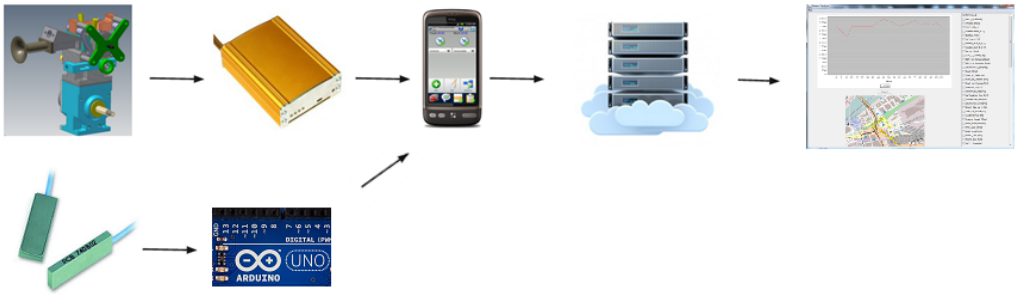


Figure 27: *Overview of the entire system*

Since the goal of the system is to transfer data through the system, all parts of the system are depending on a continuous flow of data to be thoroughly tested. However, all parts of the system have been developed in parallel which means the testing has been done using test data without continuous updating.

Under optimal circumstances the work with ECU would have been finished first so that it could provide the system with data to do proper testing. In reality this has not been the case, there have been a lot of difficulties extracting data from the ECU and this has been a bottleneck for the entire system. The system also has a weakness in the fact that both intermediate parts between the ECU and desktop application are transforming the data

in some way: the mobile application writes it to a text file which is being compressed while the web server decompressed the file and converts the data into physical values. This means that shortcuts can never be used while developing.

It might seem like having two parallel processes in the data transfer process makes it more complicated but in fact it is a strength considering the robustness of the system. Since the systems are parallel, if the sensors in the engine or the logging in the ECU were to stop working, the team would still get information from the DAQ and vice versa in case the DAQ fails.

In retrospect if we would have started developing the DAQ at the same time as the rest of the system, then having problem with the acquiring data from the ECU it could have been possible to let the DAQ supply the system with data and then have done proper testing earlier on the rest of the system.

# 8 Conclusion

## 8.1 Possible future developments

During development, several features that were originally planned to be included in the system had to be cut. This section will discuss a few in terms of their feasibility and how they could be implemented in the future.

### 8.1.1 Plotting GPS coordinates

As previously stated, this was meant to have been implemented in the final product, but due to API limitations it was cut. The plan was to plot GPS coordinates on a map and allow the user to read recorded signal values at a specific geographical point. One thought was to draw the coordinates on a map and allow the user to read signal values by mousing over the points, but this would require the structure of the XML documents to be adjusted as there would otherwise be multiple points at the same coordinate, one for each signal. This is due to the fact that data points are stored by their signal, not by timestamp, meaning that for each time unit there would be a number of data points equal to the number of available signals.

### 8.1.2 Remotely modifying engine parameters

This feature was raised as an extra extension early in the project by the Vera team. This would however possibly introduce several new problems into the system. For one, additional attention would have to be paid to thread safety in the system, as sending values outside of the recommended range could cause damage to the engine. If the threading is not sufficiently secure (values are read and written in incorrect order), this could cause the application to send other values than those input by the user.

### 8.1.3 Additional sensors

It is interesting to know in what way the air flows around the vehicle and inside the wheel houses. It would be valuable if the team could lower the

impact of air resistance. The air movements inside the wheel houses is of interest because it can expose where the pressure is at its highest and the team could then come with solutions of how to distribute the pressure evenly. This would get rid of unwanted suction between the wheel and the ground.

### 8.1.4 Warning flag

Much like the GPS plotting this was supposed to be implemented in the final product. Due to the fact that we couldn't implement GPS coordinates this left out. Without the coordinates to point out on map where the car was when the flag was set we didn't see any point in implementing this. Also, we didn't figure out any smart way to connect each error with a data point in our data output. Mostly because of the chosen diagram API. Although, if a smart way is figured out in the future, we implemented it all the way until the desktop application. If an error is sent, it's connected to a data point all the way until the data is presented to the user.

# Reference list

Android Developer Guide (2013a) *Design Principles*.
http://developer.android.com/design/get-started/principles.html.
(9 May, 2013)

Android Developer Guide (2013b) *LocationManager*.
http://developer.android.com/reference/android/location/LocationManager.html.
(23 April, 2013)

Android Developer Guide (2013d) *Settings*.
http://developer.android.com/design/patterns/settings.html.
(19 April, 2013)

Android Developer Guide (2013e) *Menus*.
http://developer.android.com/guide/topics/ui/menus.html.
(19 April, 2013)

Android Developer Guide (2013e) *Iconography*.
http://developer.android.com/design/style/iconography.html.
(21 April, 2013)

Android Developer Guide (2013f) *Launcher Icons*.
http://developer.android.com/guide/practices/ui_guidelines/icon_design_launcher.html.
(21 April, 2013)

Android Developer Guide (2013g) *Location*.
http://developer.android.com/reference/android/location/Location.html.
(24 April, 2013)

Android Developer Guide (2013h) *AsyncTask*.
http://developer.android.com/reference/android/os/AsyncTask.html.

(16 Maj, 2013)

Android Developer Guide (2013i) *USB Host and Accessory*.
http://developer.android.com/guide/topics/connectivity/usb/index.html.
(16 Maj, 2013)

Android Developer Guide (2013j) *Bluetooth*.
http://developer.android.com/guide/topics/connectivity/bluetooth.html.
(16 Maj, 2013)

Boghard et al. (2008) *Arbete och teknik på människans villkor*. 1:1. Stockholm: Prevent.

Garmin (2013) *What is GPS?*.
http://www8.garmin.com/aboutGPS/.
(22 April, 2013)

Illinois Institute of Technology (2013) *dvantages of SQL*.
http://www.cs.iit.edu/ cs561/cs425/VenkatashSQLIntro/Advantages%20&%20Disadvantages.htr
(18 April, 2013)

Mark A. Weiss (2005) *(*Data Structures and Algorithm Analysis in Java) 2. Pearson.

Shell Eco-Marathon (2013) *Shell Eco-Maraton Europe 2013, Official Rules Chapter 2*.
http://s09.static-shell.com/content/dam/shell-new/local/corporate/ecomarathon/downloads/pd
europe-official-rules-chapter-2-180413.pdf. p.11.
(12 May, 2013)

Sony Mobile (2013) *Xperia sola*.
http://www.sonymobile.com/global-en/products/phones/xperia-sola/specifications/.

(22 April, 2013)

Tech2 (2013) *What is A-GPS? How Does it Work?.*
http://tech2.in.com/features/all/what-is-agps-how-does-it-work/115142.
(22 April, 2013)

TPMS Sweden (2013a) *Vad är TPMS?.*
http://www.tpms-swe.se/tpms/what-is-tpms/.
(17 April, 2013)

TPMS Sweden (2013a) *Motorcykel TPMS (M202).*
http://www.tpms-swe.se/eftermarknadsprodkter/motorcykel-tpms/.
(18 April, 2013)

W3 (2013) *multipart/form-data* http://www.w3.org/TR/html401/interact/forms.html#h-17.13.4.2.
(22 April, 2013)

# A Contributions

In an early stage we divided the project into sub parts. Since we were 6 people we found that working in pairs would be the best way to go. We have had regular meetings at a minimum of twice a week with a meeting agenda. This is how the groups of responsibility looked like:

**ECU interpretation and USB Interface**
Joanna
Johannes

**Database and Android App**
Mikael
Anders

**Desktop Application**
Philip
Ewa

In the middle of the period we extended the project with sensors and transducers. This gave us new working areas which had to be filled. Therefore we redesigned the groups. This is how the groups of responsibility looked like:

**ECU interpretation and USB Interface**
Johannes

**Android App**
Joanna
Anders(Project Manager)

**Web server**
Mikael

**Desktop Application**
Philip

**Sensors and transducers**
Ewa
Johannes

**Microcontroller**
Johannes

The work itself has been done both in pairs but also carried out alone while meetings has focused on problems, discussion and follow ups.

## A.1 Project

**Anders**
Project Manager
Database Modeling
Design of icon, logotype and poster
CTK's Bachelor's Challenge: Moment 1
Mobile App: Design
Mobile App: Run mode with functionalities
Mobile App: Storage of logged data
Mobile App: Transferring of logged data
Software Documentation

**Joanna**
Mobile App: GUI Development
Mobile App: General Development
MatLab: Interpretation of MatLab Script(by Civinco)
Responsible for LaTeX document
CTK's Bachelor's Challenge: Moment 1 & 2
Software Documentation

**Johannes**

ECU Interpretation
Mobile App: USB Interface(ECU-Phone connection)
Mobile App: Bluetooth Interface (Microcontroller-Phone connection)
Mobile App: Storage of logged data
Sensors and transducers: Bluetooth module
Sensors and transducers: Installation
Microcontroller: Software Development
Microcontroller: Installation

**Ewa**

Sensors and transducers: Research
Sensors and transducers: Installation
Sensors and transducers: Arduino Development
Responsible for LaTeX document

**Mikael**

Web server: Lead Developer
Desktop App: Development
MatLab: ”Translation” of MatLab Script(by Civinco)

**Philip**

Desktop App: Lead developer
Desktop App: GUI
Desktop App: Connection Handling
Desktop App: XML Parsing

## A.2 Report

Editorial work was carried out by Philip, Anders, Ewa and Joanna.

**Anders**

Introduction 1.1, 1.5
Mobile Application 4, 4.2, 4.2.1, 4.2.2,4.2.5, 4.2.6
Discussion 7.3.2, 7.3.3

**Joanna**

Introduction 1, 1.1, 1.3
Mobile Application 4.1 and 4.2.2
Database transfer 5.3
Discussion 7.3, 7.3.1, 7.6

**Johannes**

Mobile application 4.2.3, 4.2.4
ECU interpretation and USB Interface 2
Microcontroller 3.3
Discussion 7.1

**Ewa**

Sensors and Transducers 3, 3.1, 3.2

**Mikael**

Database transfer 5
Discussion 8.1.4, 7.4
Conclusion 7.5.3

**Philip**

Abstract
Sammanfattning
Introduction 1.4
Database 5.1, 5.2, 5.4
Desktop application 6
Discussion 7.5.1, 7.5.2
Conclusion 8.1.1, 8.1.2

# B Data sheets

The following data sheets are included:

**1** Michelin 45-75R16 RADIAL 2013

**2** Hamlin 59025-1-S-02-A

**3** Wabash 971 RPS

**4** Impaqed Products BV TPMS 10.02.011

**5** Radiotronix RCR-433-MPR

**6** SpectraSymbol Flex Sensor Rev A1

**7** Sharp GP2Y0A41SK0F

**8** Memsic 2125 28017

**9** IC Haus LFL 1402

**10** Free2Move F2M03GLA

# MICHELIN TIRES AND RIMS CARACTERISTICS
# Prototype vehicles

## — TECHNICAL SPECIFICATIONS —

| | |
|---|---|
| **Maximum pressure:** | **7 bars (700 kPa)** |
| **Load capacity:** | **100 kg** |
| **Speed limit:** | **70 km/h** |
| **Recommended rim size:** | **1.20 J16 - 1.35 J16** |
| **Electrical resistance:** | **> 3 E+10 Ω** |

## — TIRE IDENTIFICATION (SIDEWALL MARKINGS) —

**Manufacturing week/year :** **WW13** **FOR COMPETITION PURPOSE ONLY**

**Only tires with above markings, manufactured in 2013, are certified conform to this datasheet.**

## — TIRE DIMENSIONS —

| TIRE SIZE DIMENSION | Section width mm | Overall Diameter mm |
|---|---|---|
| **45/75 R16** | **45** | **478** |

**Theoretical dimensions depending on pressure and rim**

## — RIM DIMENSIONS —

**"drop center rim with cylindrical bead seats"**

| WIDTH CODE | DIMENSIONS (mm) | | | | | | | | | | | | | |
|---|---|---|---|---|---|---|---|---|---|---|---|---|---|---|
| | A | B | | G | P | H | C | R1 | R2 | R3 | R4 | R9 | D | πd |
| | +0,15 -0,5 | min. | max. | ±0,5 | +0,2 -0 | +1,0 -0,5 | ref. | ref. | max. | min. | min. | min. | | +2,0 -0,5 |
| 1,20 | 30,5 | 5,5 | 7,5 | 9 | 3 | 7 | 3,5 | 6 | 1,5 | 1,5 | 5 | 7,0 | 405,6 | 1274,2 |
| ***1,35*** | ***34,0*** | ***6,5*** | ***8,5*** | ***10*** | ***3,5*** | ***7,5*** | ***4*** | ***6,5*** | ***1,5*** | ***2*** | ***5*** | ***7,0*** | ***405,6*** | ***1274,2*** |

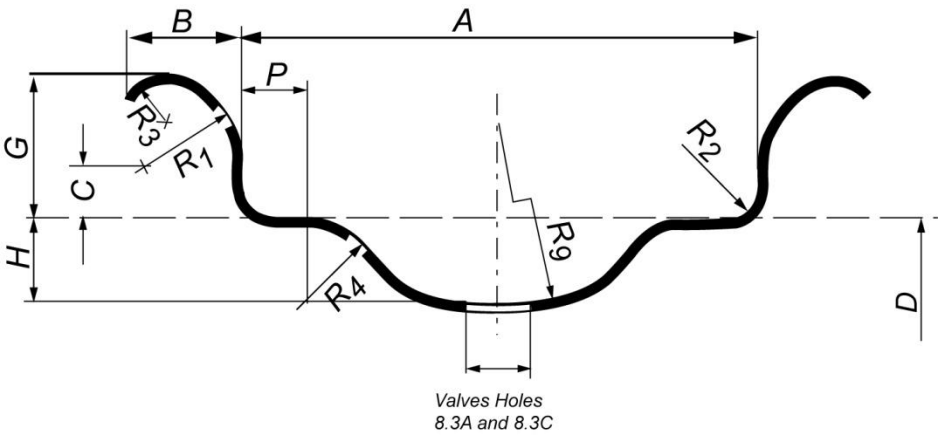

File E61760(N)

# 59025 Firecracker Features and Benefits

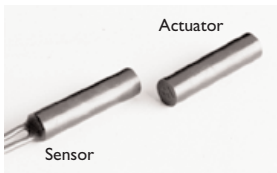


## Features

- 2 part magnetically operated proximity sensor
- UL recognised
- Choice of normally open, normally closed or change over contacts
- Customer defined sensitivity
- Choice of cable length and connector

## Benefits

- Quick and easy to install
- No standby power requirement
- Operates through non-ferrous materials such as wood, plastic or aluminium
- Hermetically sealed, magnetically operated contacts continue to operate long after optical and other technologies fail due to contamination

## Applications

- Position and limit sensing
- Security
- Level sensing
- Linear actuators

## DIMENSIONS (in) mm

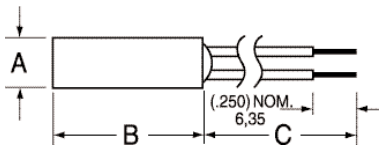


| | A Max | B Max | C NOM. |
|---|---|---|---|
| 57025 | (.245) 6,22 | (1.000) 25,40 | - |
| 59025 | (.245) 6,22 | (1.000) 25,40 | Table 3 ± (.393) 10,00 |

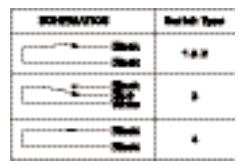

## CUSTOMER OPTIONS - Switching Specifications

| TABLE 1 Contact Type | | | Normally Open | Normally Open High Voltage | Change Over | Normally Closed |
|---|---|---|---|---|---|---|
| Switch Type | | | 1 | 2 | 3 | 4 |
| | Power | Watt - max. | 10 | 10 | 5 | 5 |
| Voltage | Switching | Vdc - max. | 200 | 300 | 175 | 175 |
| | Breakdown | Vdc - min. | 250 | 450 | 200 | 200 |
| Current | Switching | A - max. | 0.5 | 0.5 | 0.25 | 0.25 |
| | Carry | A - max. | 1.2 | 1.5 | 1.5 | 1.5 |
| Resistance | Contact, Initial | Ω - max. | 0.2 | 0.2 | 0.2 | 0.2 |
| | Insulation | Ω - min. | $10^{10}$ | $10^{10}$ | $10^{9}$ | $10^{9}$ |
| Capacitance | Contact | pF - typ. | 0.3 | 0.2 | 0.3 | 0.3 |
| Temperature | Operating | °C | -40 to +105 | -20 to +105 | -40 to +105 | -40 to +105 |
| | Storage | °C | -65 to +105 | -65 to +105 | -65 to +105 | -65 to +105 |
| Time | Operate | ms - max. | 1.0 | 1.0 | 3.0 | 3.0 |
| | Release | ms - max. | 1.0 | 1.0 | 3.0 | 3.0 |
| Shock | 11ms 1/2 sine | G - max. | 100 | 100 | 50 | 50 |
| Vibration | 50-2000 Hz | G - max. | 30 | 30 | 30 | 30 |

## CUSTOMER OPTIONS - Sensitivity, Cable Length and Termination Specification

**TABLE 2**

**Sensitivity Options:-**
Activate Distances are approximate using Hamlin 57025 actuator as illustrated
Switch AT before modification

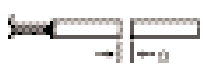

| Select Option | | S | | T | | U | | V | |
|---|---|---|---|---|---|---|---|---|---|
| Switch Type | | Pull In AT Range | Activate Distance d (in) mm | Pull In AT Range | Activate Distance d (in) mm | Pull In AT Range | Activate Distance d (in) mm | Pull In AT Range | Activate Distance d (in) mm |
| 1 | Normally Open | 12-18 | (.453) 11.5 | 17-23 | (.374) 9.5 | 22-28 | (.315) 8.0 | 27-33 | (.295) 7.5 |
| 2 | High Voltage | | | | | | | | |
| 3 | Change Over | 15-20 | (4.13) 10.5 | 20-25 | (.354) 9.0 | 25-30 | (.295) 7.5 | | |
| 4 | Normally Closed | | | | | | | | |

**TABLE 3**

**Cable Type:-**
**24 AWG 7/32 PVC 105°C UL1430/UL1569**

Standard Lengths

| SELECT OPTION | CABLE LENGTH (in) mm |
|---|---|
| 01 | (3,94) 100 |
| 02 | (11,81) 300 |
| 03 | (19,69) 500 |
| 04 | (29,53) 750 |
| 05 | (39,37) 1000 |

**TABLE 4**

**Termination Options:-**

| SELECT OPTION | DESCRIPTION (2 WIRE VERSIONS ILLUSTRATED) | |
|---|---|---|
| A | Tinned leads | |
| B | Crimped terminals | |
| C | 6.35mm fastons | |
| D | AMP MTE 2.54mm pitch | |
| E | JST XHP 2.5mm pitch | |

## ORDERING INFORMATION

59025 – X – X – XX – X

- Series 59025
- Switch Type — Table 1
- Sensitivity — Table 2
- Cable Length — Table 3
- Termination — Table 4

**Hamlin USA** Tel: +1 920 648 3000 • Fax: +1 920 648 3001 • Email: sales.us@hamlin.com
**Hamlin UK** Tel: +44 (0)1379 649700 • Fax: +44 (0)1379 649702 • Email: sales.uk@hamlin.com
**Hamlin Germany** Tel: +49 (0) 6181 953660 • Fax: +49 (0) 6181 9536666 • Email: sales.de@hamlin.com
**Hamectrol France** Tel: +33 (0) 1 4687 0202 • Fax: +33 (0) 1 4686 6786 • Email: sales.fr@hamlin.com

ISSUE No: 4 DATE: 1/5/3

DETAILS PROVIDED ON THIS DATA SHEET ARE PROVIDED FOR INFORMATION PURPOSES ONLY AND SHOULD NOT BE RELIED UPON AS BEING ACCURATE FOR ANY PARTICULAR PURPOSE. Product performance may be affected by the application to which the product is put. Upon request, HAMLIN will assist purchasers by providing information specific to any particular application. HAMLIN disclaims any and all liability whatsoever for any purchaser's reliance upon the information contained on this data sheet without further consultation with authorised representatives of HAMLIN.



# Wabash 971 RPS

## Rotary Position Sensor



### Designed to operate in demanding environments where long life and high performance is required.

The Wabash 971 Rotary Position Sensor (RPS) uses high performance conductive polymer tracks and contact designs to achieve 2 percent independent linearity. Reliable and versatile, it is ideal for applications such as:

- Electric industrial vehicles
- Off-road steering and transmission
- Engine management and controls
- Recreational vehicles
- Agricultural equipment

The RPS can be supplied with options for electrical track length, resistance, flying leads, integral connector and actuator drive direction. Its rugged design can withstand:

- Temperature extremes
- Harsh environments
- Mechanical shock and vibration

Wabash generic sensors offer customers low cost options with minimal or little tooling investment.

Count on Wabash Technologies for sensing solutions that add performance and value to products. We serve customers with advanced design and engineering capabilities, flawless quality performance, flexible manufacturing and on-time delivery.

To learn more about how our products can help you, contact us at 260-355-4100 or visit www.wabashtech.com

Wabash TECHNOLOGIES

Committed to sensor advancement.

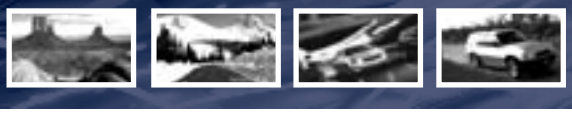

# The Wabash 971 RPS

Rotary Position Sensor

## Technical Specifications

### PHYSICAL

- Fully "sealed" robust package suitable for automotive, agricultural, marine and industrial environments
- High performance, compact potentiometric sensor
- Suitable for arduous engine management and closed loop control system feedback applications
- Through-hole actuation capability
- Integral connector or flying lead versions
- Actuator and mounting configuration options

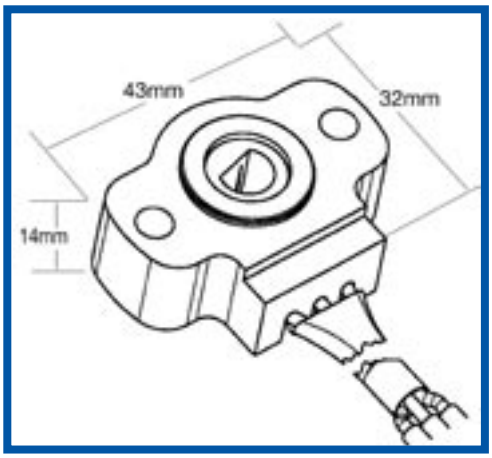


### ELECTRICAL

| | Specifications |
|---|---|
| Track Resistance (R†) | 5KΩ ±20% @ 20°C ±10°C |
| Linearity (Independent) | ±2% |
| Index Point | 3% ±2% @ -Low End Stop |
| Output Gradient | 0.973%/° Max 0.873%/° Min |
| Power Rating | I Watt @ 40°C Derated to Zero @ 135°C |
| Temperature Coefficient | ±600ppm/°C |
| Insulation Resistance | 1000MΩ Min 500V DC |
| Maximum Voltage | 13.5V DC |

### MECHANICAL

| | Specifications |
|---|---|
| Rotation | 128° ±2° |
| Spring Torque | Min Return - 6 Nmm<br>Max Wind up - 120 Nmm |
| Mechanical End Stop Strength | 680Nmm Min |
| Fixing Torque (M4 and Washer) | 2Nm Maximum |
| Lead Wire Version 971 - 0002 | 16/0.2, 0.5 mm CSA<br>1.8 mm OD<br>Pull Strength: 10 kg Max (all 3 wires) |
| Connector Version 971 - 0001 | Connector to<br>M47/2<br>AMP P/N 828748 - 3 |

### PERFORMANCE & ENVIRONMENTAL

| | Specifications |
|---|---|
| Rotation Life (- 40° - +130°C) | 5, 000, 000 Full Cycles<br>10, 800, 000 Dither Cycles (2°) |
| Functional Temperature Range | -40°C to +85°C Wire Version<br>-40°C to +155°C Connector Version |
| Mechanical Shock (Handling) | Im Drop onto Concrete Floor |
| Mechanical Shock (Bump) | 1000 40 g 11 ms Shocks (3 axis) |
| Vibration (Sinusoidal) | 10 - 57 Hz @ 1 mm Displacement<br>57 - 100 Hz @ 10 g<br>100 - 500 Hz @ 27 g |
| Sealing | IP 5X (dust) |
| Pressure Wash | 90 Bar 0.5-0.6 m 5-6 Seconds |
| Humidity | 40°C 96% RH 504 Hours |
| Chemical Resistance | Screen Wash, Gearbox Oil<br>Brake Fluid Dot 4<br>Isoctane/Toluene (70/30) + 15% Methanol<br>Engine Cleaning Agent, Engine Coolant<br>Antigel Fluid, Electrolyte Density<br>1285 Kg/m3 (Sulphuric Acid H2S04) |

Wabash TECHNOLOGIES

Committed to sensor advancement.

**Wabash Technologies, Inc.**
1375 Swan Street, P.O. Box 829, Huntington, IN 46750-0829 USA Phone: 260-355-4100 Fax: 260-355-4265

**Wabash Technologies, Ltd.**
5 Faraday Park, Dorcan, Swindon, Wiltshire, SN3 5JF, England UK Phone: +44 1793 600500 Fax: +44 1793 600600

## VIII. Specifications

Monitor

| | |
|---|---|
| Operating Temperature: | -30□ ~ +70□ |
| Modulation Type: | FSK |
| Mid-frequency: | 433.9 MHz |
| Receiving Sensitivity: | -105 dbm |
| Input Voltage: | 5V ( Cigarette lighter plug ) |
| | 1.5V×2 (AA batteries) |
| Weight: | 72±2 g |

Transmitter

| | |
|---|---|
| Operating Temperature: | -30□ ~ +85□ |
| Pressure Range: | 0~13 bar / 0~188 psi |
| Accuracy of Pressure Measurement: | ± 0.15 bar / ± 2 psi |
| Modulation Type: | FSK |
| Mid-frequency: | 433.9 Mhz |
| Transmitting Power: | -10 dbm |
| Weight: | 8±1 g |

## Typical Applications

- Home Security Systems
- Remote Lighting Controls
- Remote Gate Controls
- Asset Tracking
- Sensor Monitoring

## Features

- The Module's Frequency is from UHF (ASK) 280~433.92 MHz
- High Sensitivity Passive Design
- 4800 B/S Baseboard Data Rate.
- Simple to apply with Low External Parts count
- Low Supply Voltage: VCC= 5 Vdc
- ASK Data Shaping Comparator Included

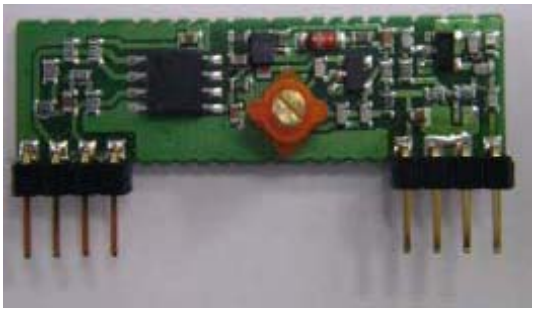

## Description

The RCR-433-MPR is a miniature receiver module that receives On-off keyed (OOK) modulation signal and demodulated to digital signal for the next decoder stage. Local Oscillator is made of L/C structure. The result is excellent performance in simple-to-use. The RCR-433-MPR is designed specifically for unlicensed remote control and wireless security receiver operating at 433 MHz in the USA under FCC Part 15 regulation.

| Item No. | Parameter | Description | Value | | | |
|---|---|---|---|---|---|---|
| | | | MIN | TYP | MAX | UNIT |
| 1. | Operating Radio Frequency | | 280`433.92 | | | MHz |
| 2. | Sensitivity | Vcc 5.0, AT25C BER= 3/100 | | -105 | | dBm |
| 3. | Modulation | | | ASK | | |
| 4. | Power Supply | | 4.75 | 5 | 5.25 | v |
| 5. | Supply Count | | | 4 | 5 | mA |
| 6. | Data Rate | | | 3 | | |
| 7. | Operating Temperature | | -40 | | +85 | $^{o}$C |
| 8. | RF Bandwidth – 3dB | | | 4 | | MHz |

## *Document Control*

| | | |
|---|---|---|
| **Created By** | TJ Everett | 1/20/07 |
| **Engineering Review** | | |
| **Marketing Review** | | |
| **Approved - Engineering** | | |
| **Approved - Marketing** | | |

## *Revision History*

| Revision | Author | Date | Description |
|---|---|---|---|
| 1.0 | TJE | 1/20/07 | Document Created |
| | | | |
| | | | |
| | | | |
| | | | |
| | | | |

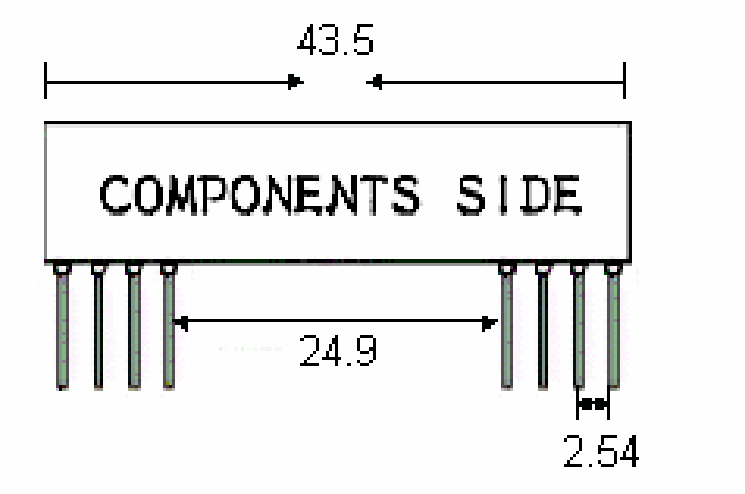


Mechanical Drawing

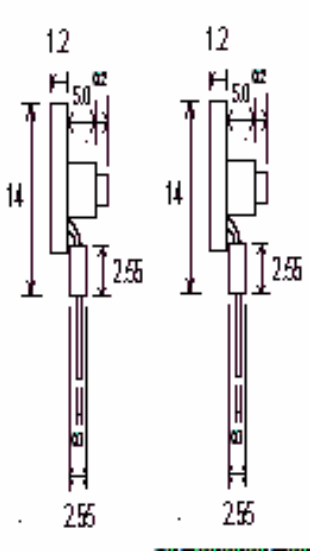


Pinout Diagram

## *Absolute Maximum Ratings*

| Rating | Value | Units |
|---|---|---|
| Power Supply and All Input Pins | -0.3 to +12 | VDC |
| Storage Temperature | -50 to +100 | °C |
| Soldering Temperature (10 sec) | 350 | °C |
| Industrial Temperature | -40 to +85 | °C |

## *Pin Description*

| Pin | Name |
|---|---|
| 1 | GND |
| 2 | DIGITAL OUTPUT |
| 3 | LINEAR OUTPUT |
| 4 | VCC |
| 5 | VCC |
| 6 | GND |
| 7 | GND |
| 8 | ANT |



## *Typing Test Circuit*

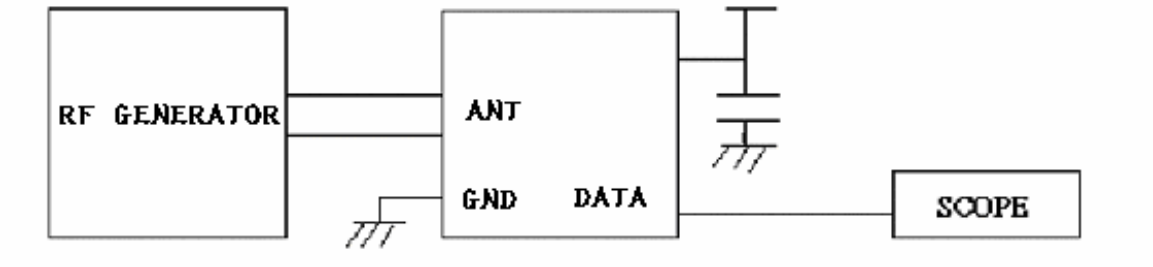


## *Typical Receiver Application*

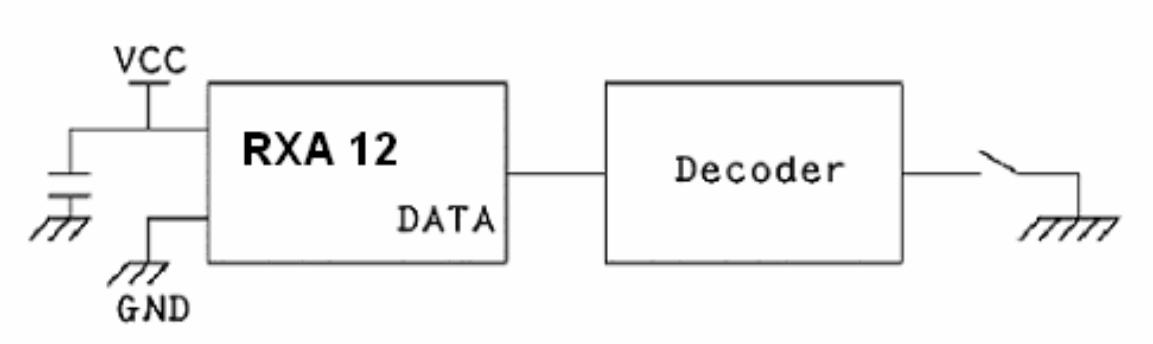


Notes:
1. Encoder : HT12D/F , PTC ( 2262 )
2. Antenna : Length = 22.6cm for 315MHz

## *Ordering Information*

| PRODUCT | ORDER CODE |
|---|---|
| RCR-433-MPR | RCR-433-MPR |

**Radiotronix Inc.**

905 Messenger Lane
Moore, OK 73160

(405) 794-7730
(405) 794-7477 (Fax)

www.radiotronix.com
sales@radiotronix.com

spectrasymbol

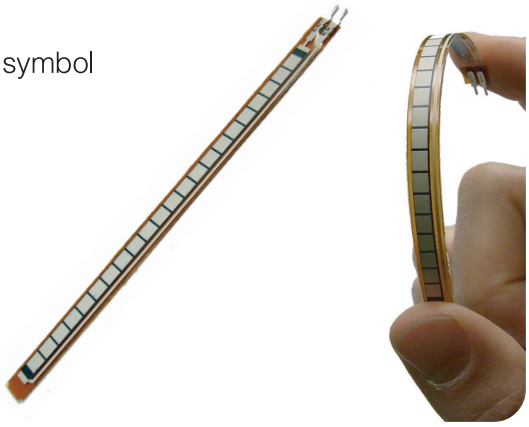

# Flex Sensor FS

## Features

- Angle Displacement Measurement
- Bends and Flexes physically with motion device
- Possible Uses
  - Robotics
  - Gaming (Virtual Motion)
  - Medical Devices
  - Computer Peripherals
  - Musical Instruments
  - Physical Therapy
- Simple Construction
- Low Profile

## Mechanical Specifications

-Life Cycle: >1 million
-Height: ≤0.43mm (0.017")
-Temperature Range: -35°C to +80°C

## Electrical Specifications

-Flat Resistance: 10K Ohms
-Resistance Tolerance: ±30%
-Bend Resistance Range: 60K to 110K Ohms
-Power Rating : 0.50 Watts continuous. 1 Watt Peak

## Dimensional Diagram - Stock Flex Sensor

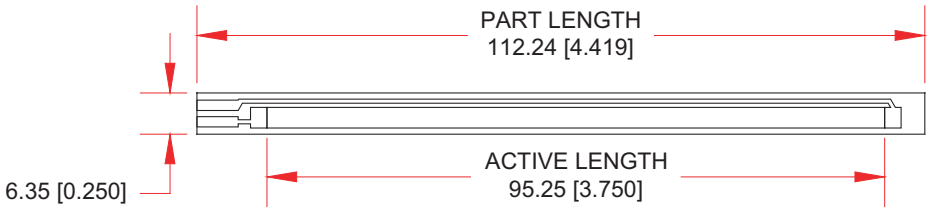


## How to Order - Stock Flex Sensor

| FS | L | 0095 | 103 | ST |
|---|---|---|---|---|
| Series | Model | Active Length | Resistance | Connectors |
| FS = Flex Sensor | L = Linear | 0095 = 95.25mm | 103 = 10 KOhms | ST = Solder Tab |

## How It Works



## BASIC FLEX SENSOR CIRCUIT:

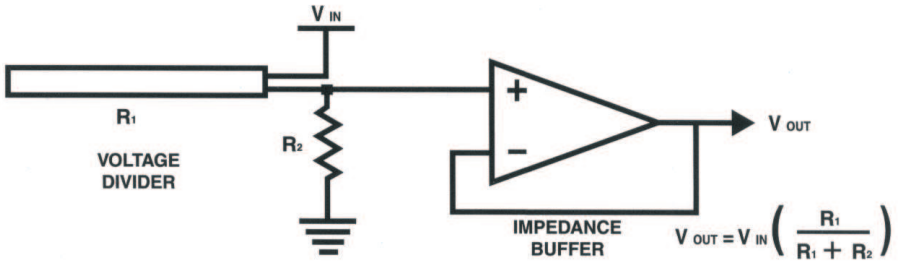


*Following are notes from the ITP Flex Sensor Workshop*

"The impedance buffer in the [Basic Flex Sensor Circuit] (above) is a single sided operational amplifier, used with these sensors because the low bias current of the op amp reduces errer due to source impedance of the flex sensor as voltage divider. Suggested op amps are the LM358 or LM324."

"You can also test your flex sensor using the simplest circut, and skip the op amp."

**"Adjustable Buffer** - a potentiometer can be added to the circuit to adjust the sensitivity range."

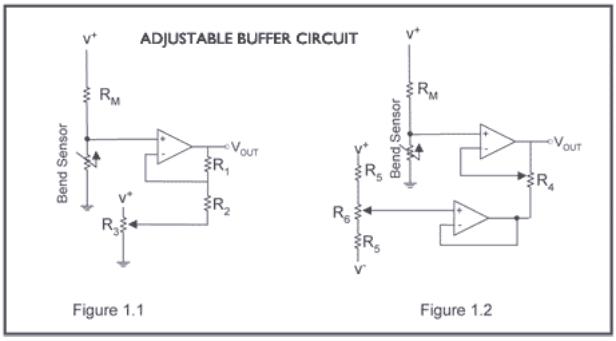


**"Variable Deflection Threshold Switch** - an op amp is used and outputs either high or low depending on the voltage of the inverting input. In this way you can use the flex sensor as a switch without going through a microcontroller."

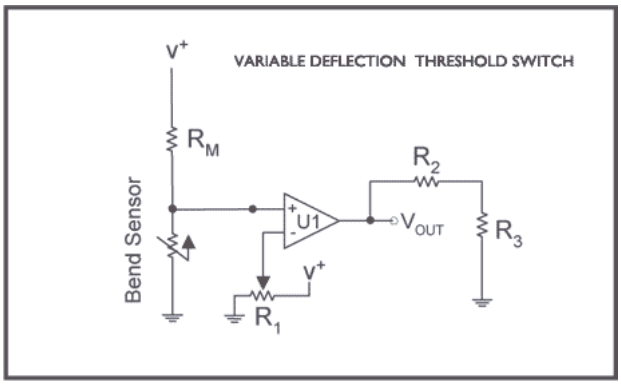


**"Resistance to Voltage Converter** - use the sensor as the input of a resistance to voltage converter using a dual sided supply op-amp. A negative reference voltage will give a positive output. Should be used in situations when you want output at a low degree of bending."

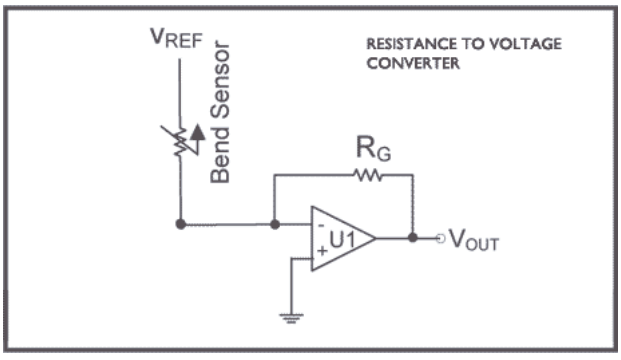

SPEC. No. ED-05G101A
ISSUE March 5, 2007

SHARP

OPTO-ANALOG DEVICES DIVISION
ELECTRONIC COMPONENTS GROUP
SHARP CORPORATION

# SPECIFICATION

DEVICE SPECIFICATION FOR

Analog Output Type Distance Measuring Sensor

MODEL No.

GP2Y0A41SK0F

---

Enclosed please find copies of the Specifications which consists of 10 pages including cover.
After confirmation of the contents, please be sure to send back ☐ copies of the Specifications with approving signature on each.

| CUSTOMER'S APPROVAL | PRESENTED |
|---|---|
| DATE | DATE |
| BY | BY H. O |

H. Ogura,
Department General Manager of
Engineering Dept.,III
Opto-Analog Devices Division.
ELECOM Group
SHARP CORPORATION

Product name : Analog output type distance measuring Sensor

Model No. : GP2Y0A41SK0F

1. These specification sheets include materials protected under copyright of Sharp Corporation ("Sharp"). Please do not reproduce or cause anyone to reproduce them without Sharp's consent.

2. When using this product, please observe the absolute maximum ratings and the instructions for use outlined in these specification sheets, as well as the precautions mentioned below. Sharp assumes no responsibility for any damage resulting from use of the product which does not comply with the absolute maximum ratings and the instructions included in these specification sheets, and the precautions mentioned below.

(Precautions)

(1) This product is designed for use in the following application areas ;

( ・Computers ・OA equipment ・Telecommunication equipment (Terminal)
・Measuring equipment ・Tooling machines ・Audio visual equipment
・Home appliances )

If the use of the product in the above application areas is for equipment listed in paragraphs (2) or (3), please be sure to observe the precautions given in those respective paragraphs.

(2) Appropriate measures, such as fail-safe design and redundant design considering the safety design of the overall system and equipment, should be taken to ensure reliability and safety when this product is used for equipment which demands high reliability and safety in function and precision, such as ;

( ・Transportation control and safety equipment (aircraft, train, automobile etc.)
・Traffic signals ・Gas leakage sensor breakers ・Rescue and security equipment
・Other safety equipment )

(3) Please do not use this product for equipment which require extremely high reliability and safety in function and precision, such as ;

( ・Space equipment ・Telecommunication equipment (for trunk lines)
・Nuclear power control equipment ・Medical equipment )

(4) Please contact and consult with a Sharp sales representative if there are any questions regarding interpretation of the above three paragraphs.

3. Please contact and consult with a Sharp sales representative for any questions about this product.

1. Application

This specification applies to the outline and the characteristics of the analog output distance measuring sensor ; Model No. GP2Y0A41SK0F

2. Outline

Refer to the attached drawing No. CY13036j02.

3. Ratings and characteristics

Refer to the attached sheet, page 4, 5.

4. Reliability

Refer to the attached sheet, Page 6.

5. Outgoing inspection

Refer to the attached sheet, Page 6.

6. Supplements

6-1 GP2Y0A41SK0F Example of output distance characteristics

Refer to the attached sheet, page 8.

6-2 GP2Y0A41SK0F Example of output characteristics with the inverse of distance

Refer to the attached sheet, page 9.

6-3 This product shall not contain the following materials.

Also, the following materials shall not be used in the production process for this product.

Materials for ODS : $CFC_S$, Halon, Carbon tetrachloride 1.1.1-Trichloroethane (Methyl chloroform)

6-4 Product mass : Approx. 3.6g (TYP)

6-5 This product does not contain the chemical materials regulated by RoHS directive.

(Except for the NOT regulated by RoHS directive.)

6-6 Compliance with each regulation

6-6-1 The RoHS directive(2002/95/EC)

This product complies with the RoHS directive(2002/95/EC).

Object substances: mercury, lead (except for lead in high melting temperature type solders*1 and glass of electronic components), cadmium, hexavalent chromium, polybrominated biphenyls (PBB) and polybrominated diphenyl ethers (PBDE)

*1 : i.e. tin-lead solder alloys containing more than 85% lead

6-6-2 Content of six substances specified in Management Methods for Control of Pollution Caused by Electronic Information Products Regulation (Chinese : 电子信息产品污染控制管理办法).

| Category | Toxic and hazardous substances | | | | | |
|---|---|---|---|---|---|---|
| | Lead (Pb) | Mercury (Hg) | Cadmium (Cd) | Hexavalent chromium (Cr(VI)) | Polybrominated biphenyls (PBB) | Polybrominated diphenyl ethers (PBDE) |
| Voltage regulator | * | ✓ | ✓ | ✓ | ✓ | ✓ |

✓ : indicates that the content of the toxic and hazardous substance in all the homogeneous materials of the part is below the concentration limit requirement as described in SJ/T 11363-2006 standard.

* : indicates that the content of the toxic and hazardous substance in at least one homogeneous material of the part exceeds the concentration limit requirement as described in SJ/T 11363-2006 standard.

Lead in high melting temperature type solders (i.e. tin-lead solder alloys containing more than 85% lead) and glass of electronic components (designated by "*" in the above table) are exempt from the RoHS directive (2002/95/EC), because there is no effective way to eliminate or substitute them by present scientific technology.

7. Notes

Refer to the attached sheet, page 7.

## 2. Outline

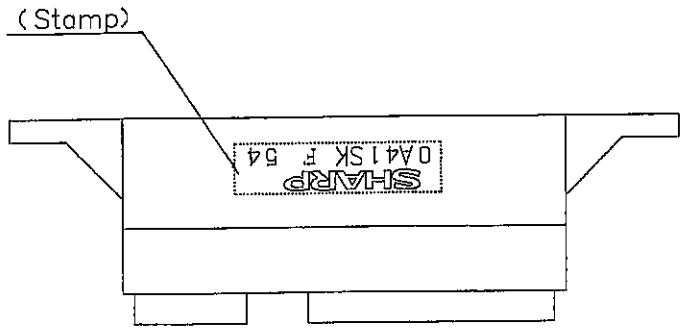


Stamp (Example)

SHARP
0A41SK F 5 4
Model name
Month (1 to 9, X, Y, Z)
Year (2005:5)

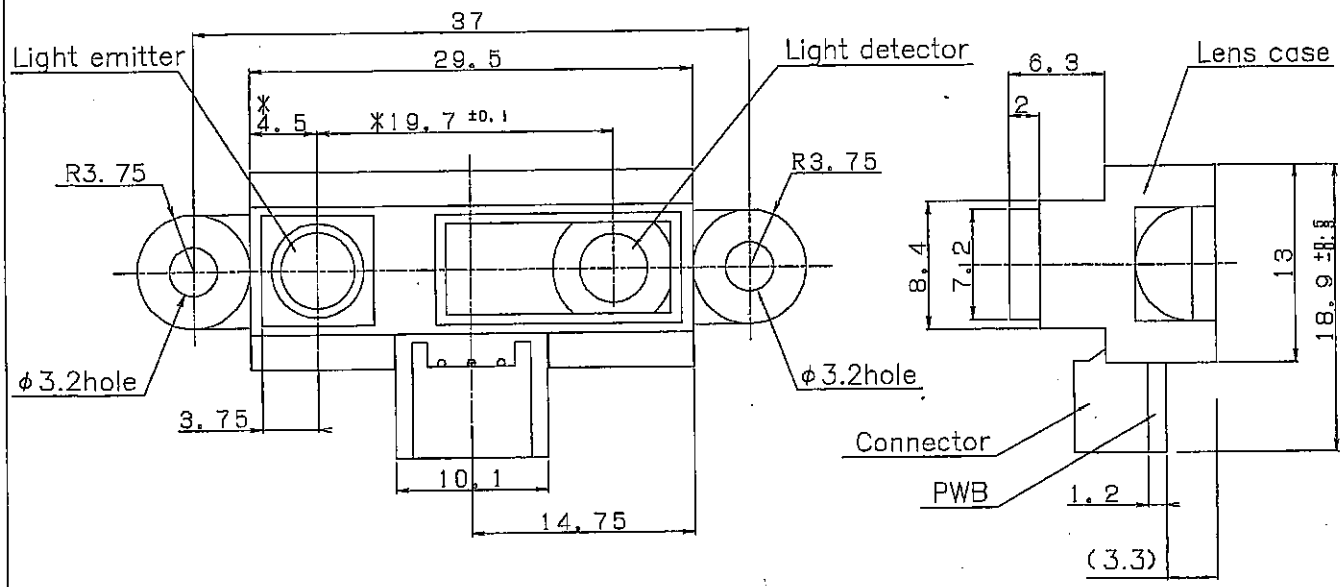


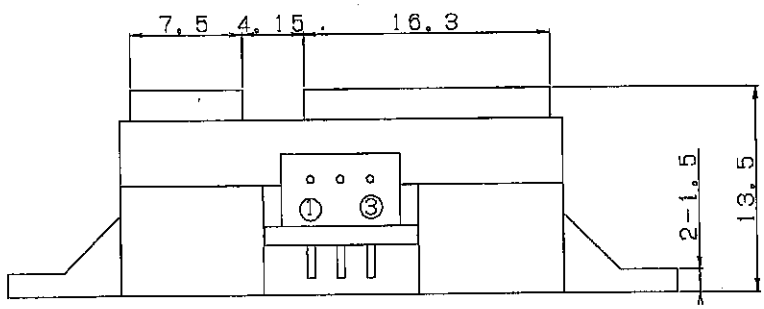


Connector signal

| | Signal name |
|---|---|
| ① | Vo |
| ② | GND |
| ③ | Vcc |

Connector :
J.S.T.TRADING COMPANY,LTD.
S3B-PH

Materials
Lens: Acrylic acid resin
(Visible light cut-off resin)
Case: Carbonic ABS
(Conducttive resin)
PCB: Paper phenol

Unit: mm Scale: 2/1

Note 1: The dimensions marked * are described the dimensions of lens center position.
Note 2: Unspecified tolerance shall be ±0.3mm.
Note 3: The dimensions in parenthesis are shown for reference.

| | |
|---|---|
| Name | GP2Y0A41SK0F Outline Dimensions |
| Drawing No. | CY13036j02 |

3-1 Schematic

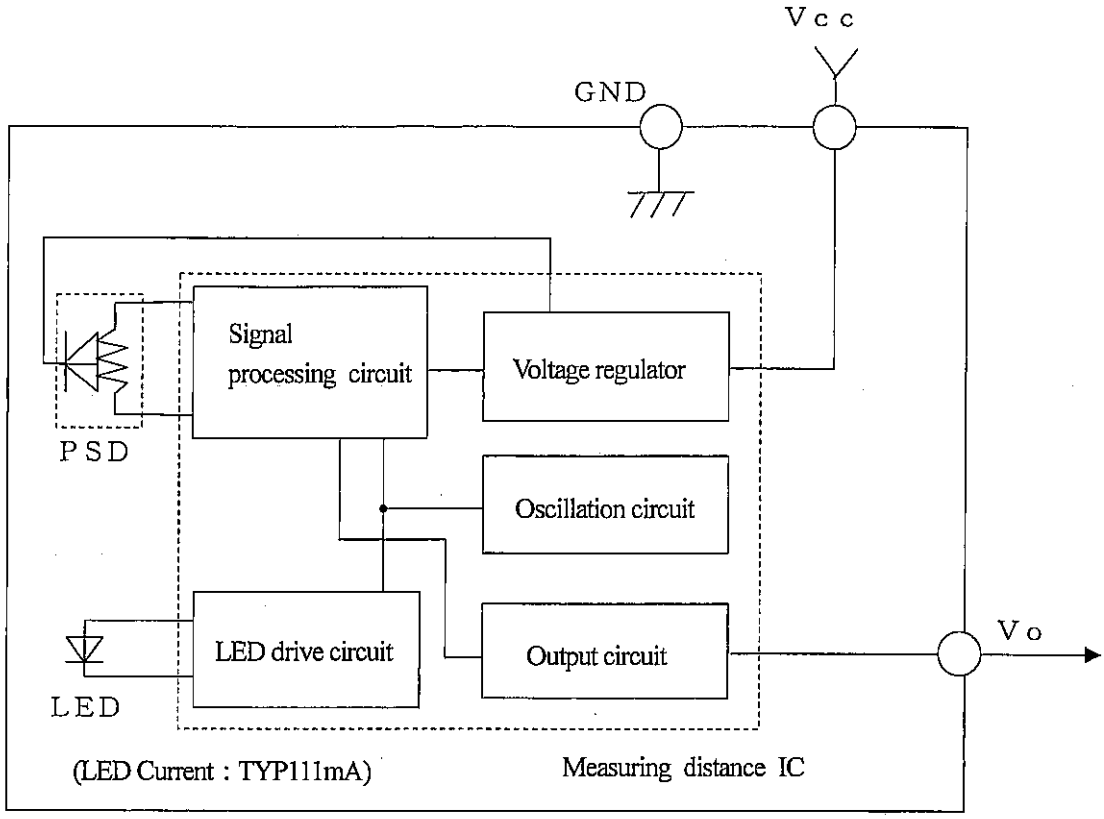


3-2 Absolute maximum ratings (Ta=25℃, Vcc=5V)

| Parameter | Symbol | Ratings | Unit | Remark |
|---|---|---|---|---|
| Supply voltage | Vcc | -0.3 to +7 | V | - |
| Output terminal voltage | Vo | -0.3 to Vcc+0.3 | V | - |
| Operating temperature | Topr | -10 to +60 | ℃ | - |
| Storage temperature | Tstg | -40 to +70 | ℃ | - |

Operating supply voltage

| Symbol | Rating | Unit | Remark |
|---|---|---|---|
| Vcc | 4.5 to 5.5 | V | - |

3-3 Electro-optical Characteristics

| Parameter | Symbol | Conditions | MIN. | TYP. | MAX. | Unit |
|---|---|---|---|---|---|---|
| Measuring distance range | ΔL | (Note 1) | 4 | - | 30 | cm |
| Output terminal voltage | Vo | L=30cm (Note 1) | 0.25 | 0.4 | 0.55 | V |
| Output voltage difference | ΔVo | Output change at L change (30cm → 4cm) (Note 1) | 1.95 | 2.25 | 2.55 | V |
| Average supply current | Icc | L=30cm (Note 1) | - | 12 | 22 | mA |

※ L: Distance to reflective object

(Note 1) Using reflective object: White paper (Made by Kodak Co., Ltd. gray cards R-27・white face, reflective ratio ; 90%)

3-4 Timing chart

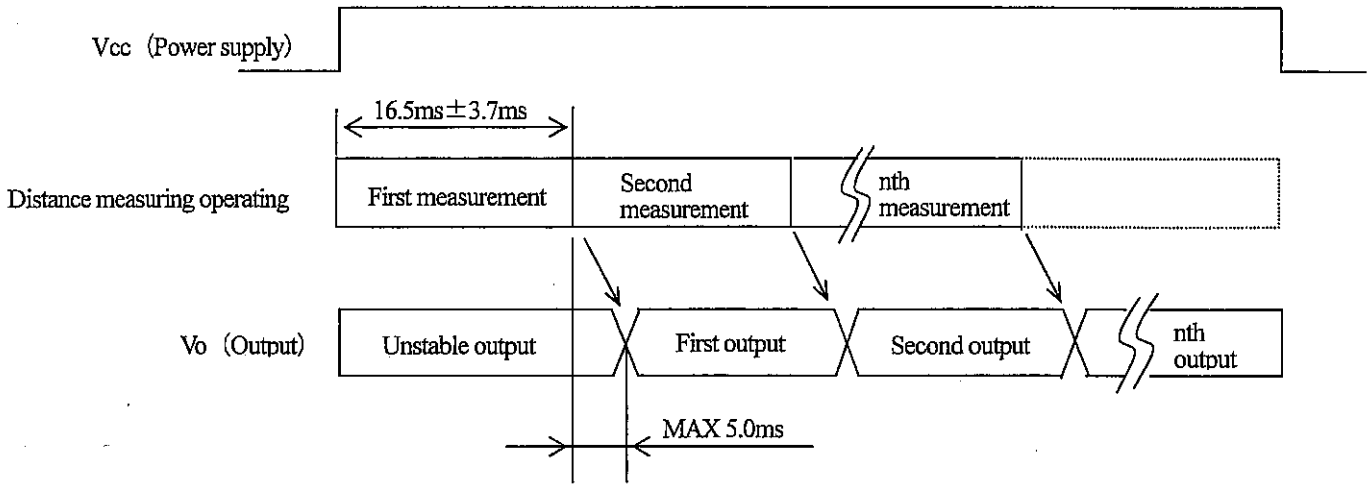

4. Reliability

The reliability of products shall be satisfied with items listed below. Confidence level : 90%

LTPD : 20 or 30

| No. | Test Items | Test Conditions | Failure Judgement Criteria | Samples (n) / Defective (c) |
|---|---|---|---|---|
| 1 | Temperature cycling | 1 cycle -40℃ to +70℃ (30min.) (30min.) 25 cycle test | Initial × 0.8 > Vo Vo > Initial × 1.2 (Note 1) | n=11, c=0 |
| 2 | High temp. and high humidity storage | +40℃, 90%RH, 500h | | n=11, c=0 |
| 3 | High temp. storage | +70℃, 500h | | n=11, c=0 |
| 4 | Low temp. storage | -40℃, 500h | | n=11, c=0 |
| 5 | Operation life (High temp.) | +60℃, Vcc=5V, 500h | | n=11, c=0 |
| 6 | Mechanical shock | 1000m/s$^2$, 6.0ms 3times/±X, ±Y, ±Z direction | | n=8, c=0 |
| 7 | Variable frequency vibration | 10 to 55 to 10Hz/1min. 2h/X, Y, Z direction overall amplitude : 1.5mm | | n=8, c=0 |

(Note 1) Test conditions are according to 3-3 Electro-optical characteristics.

(Note 2) After test, measurement shall be measured after leaving under the normal temperature and the normal humidity for two hours. But no dew point.

5. Outgoing inspection

(1) Inspection lot

Inspection shall be carried out per each delivery lot.

(2) Inspection method

A single sampling plan, normal inspection level II based on ISO 2859 is applied.

The AQL according to the inspection items are shown below.

| Defect | Inspection item | AQL (%) |
|---|---|---|
| Major defect | Electro-optical characteristics defect (In para. 3-3) | 0.4 |
| Minor defect | Defect on appearance and dimension ※ Crack, chip, scratch, stain | 1.0 |

※ Crack, chip, scratch, stain

One which affects the characteristics of para. 3-3 shall be defect.

7. Notes

[Advice for the optics]

7-1 Lens of this device shall be kept cleanly. There are cases that dust, water or oil and so on deteriorate the characteristics of this device. Please consider in actual application.

7-2 In case that protection is set in front of the emitter and detector portion, the protection cover which has the most efficient transmittance at the emitting wavelength range of LED for this product (λ=870nm±70nm), shall be recommended to use. The face and back of protection cover should be mirror polishing. Also, as there are cases that the characteristics may not be satisfied with according to the distance between the protection cover and this product or the thickness of the protection cover, please use this product after confirming the operation sufficiently in actual application.

[Advice for the characteristics]

7-3 In case that there is an object near to light exits of the sensor between the sensor and the detected object, please use this device after confirming sufficiently what the characteristics of this sensor do not change by the object.

7-4 When the detector surface receive direct light from the sun, tungsten lamp and so on, there are cases that it can not measure the distance exactly. Please consider the design that the detector does not receive direct light from such light source.

7.5 Distance between sensor and mirror reflector can not sometimes measure exactly.
In case of changing the mounting angle of this product, it may measure the distance exactly.

7.6 In case that reflective object has boundary line clearly, there is cases that distance can not measure exactly.
At that time, if direction of boundary line and the line between emitter center and detector center parallels, it is possible to decrease deviation of measuring distance.

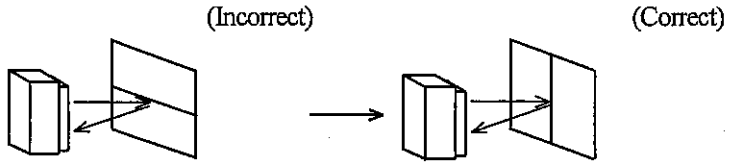


7-7 In order to decrease measuring error by moving direction of object, we recommend to mount the sensor like below drawing.

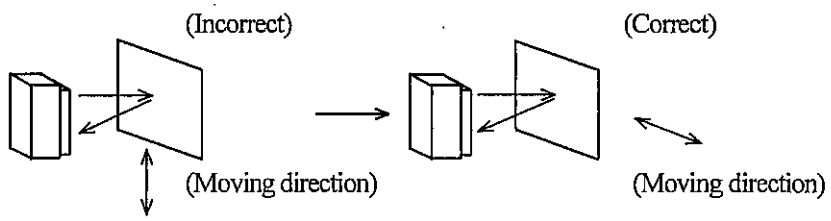


7-8 In order to stabilize power supply line, we recommend to connect a by-pass capacitor of 10μF or more between Vcc and GND near this product.

[Notes on handling]

7-9 Please don't do washing. Washing may deteriorate the characteristics of optical system and so on.
Please confirm resistance to chemicals under the actual usage since this product has not been designed against for washing.

7-10 There are some possibilities that the sensor inside the case package with lens may be exposed to the excessive mechanical stress. Please be careful not to cause any excessive pressure on the case package with lens and also on the PCB at the assembly and inserting of the set.

6-1 GP2Y0A41SK0F Example of output distance characteristics

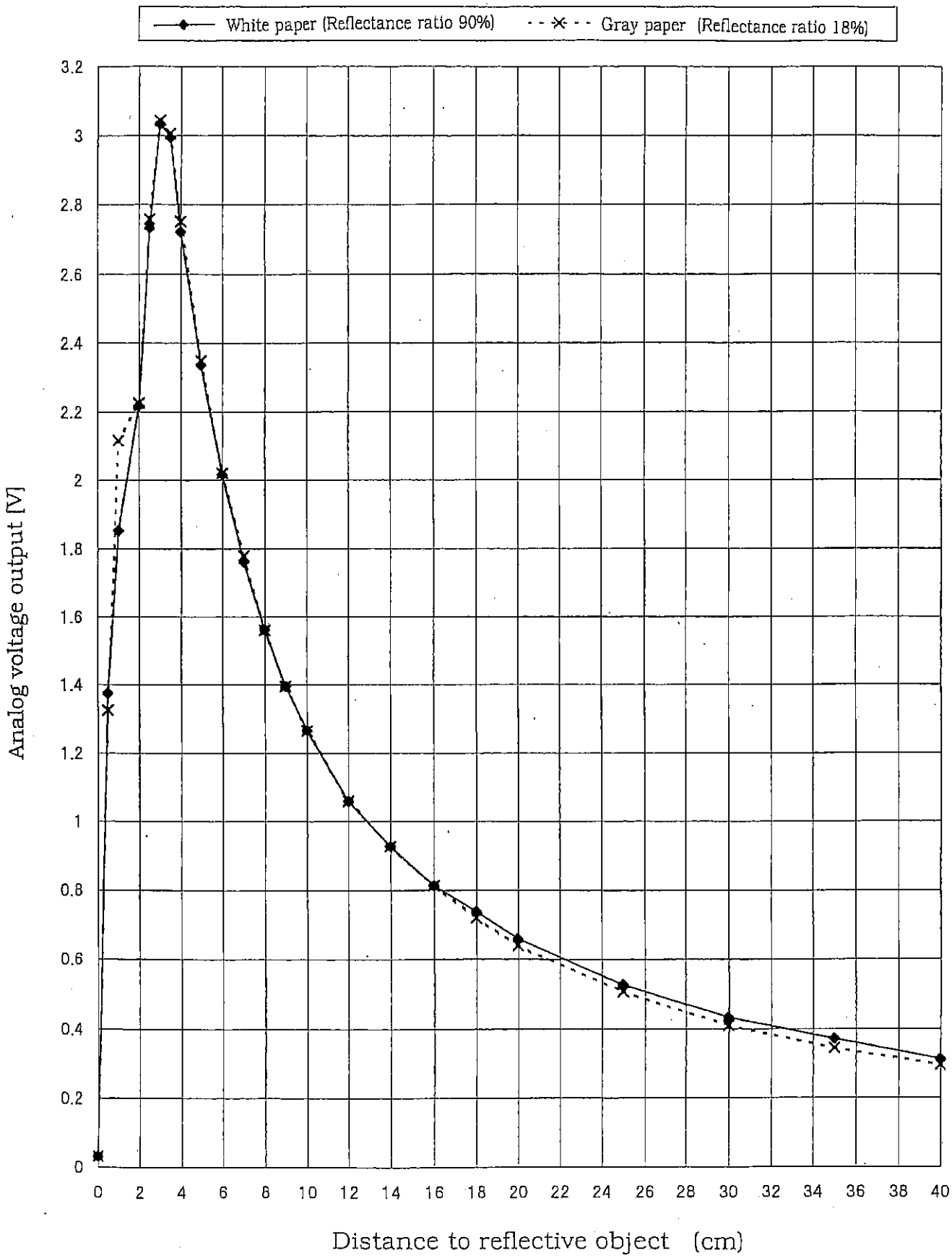

6-2 GP2Y0A41SK0F Example of output distance characteristics with the inverse of distance

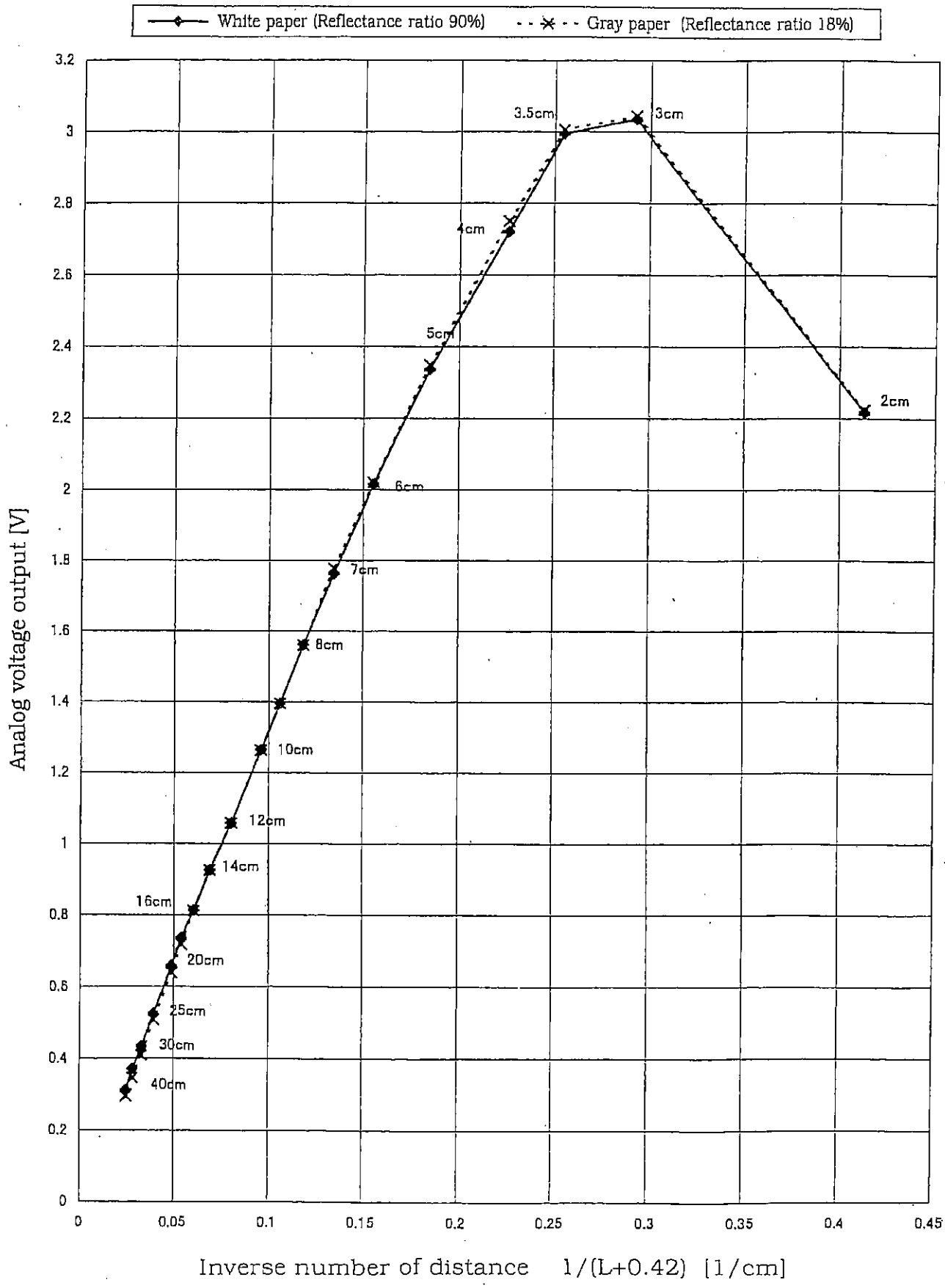

**Web Site:** www.parallax.com
**Forums:** forums.parallax.com
**Sales:** sales@parallax.com
**Technical:** support@parallax.com

**Office:** (916) 624-8333
**Fax:** (916) 624-8003
**Sales:** (888) 512-1024
**Tech Support:** (888) 997-8267

# Memsic 2125 Dual-Axis Accelerometer (#28017)

The Memsic 2125 is a low-cost thermal accelerometer capable of measuring tilt, collision, static and dynamic acceleration, rotation, and vibration with a range of ±3 g on two axes. Memsic provides the 2125 IC in a surface-mount format. Parallax mounts the circuit on a tiny PCB providing all I/O connections so it can easily be inserted on a breadboard or through-hole prototype area.

## Features

- Measures ±3 g on each axis
- Simple pulse output of g-force for each axis
- Convenient 6-pin 0.1" spacing DIP module
- Analog output of temperature (TOut pin)
- Fully temperature compensated over 0 to 70 °C operating temperature range

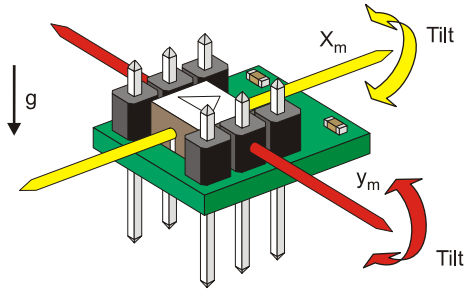


## Key Specifications

- Power Requirements: 3.3 to 5 VDC; < 5 mA supply current
- Communication: TTL/CMOS compatible 100 Hz PWM output signal with duty cycle proportional to acceleration
- Dimensions: 0.42 x 0.42 x 0.45 in (10.7 x 10.7 x 11.8 mm)
- Operating temperature: 32 to 158 °F (0 to 70 °C)

## Application Ideas

- Dual-axis tilt and acceleration sensing for autonomous robot navigation
- R/C tilt controller or autopilot
- Tilt-sensing Human Interface Device
- Motion/lack-of-motion sensor for alarm system
- Single-axis rotational angle and position sensing

## Theory of Operation

The MX2125 has a chamber of gas with a heating element in the center and four temperature sensors around its edge. When the accelerometer is level, the hot gas pocket rises to the top-center of the chamber, and all the sensors will measure the same temperature.

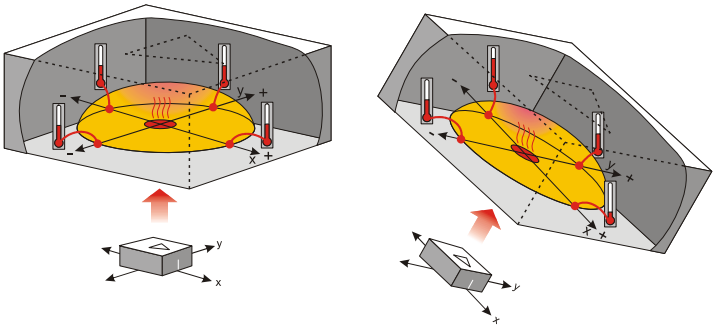

By tilting the accelerometer, the hot gas will collect closer to some of temperature sensors. By comparing the sensor temperatures, both static acceleration (gravity and tilt) and dynamic acceleration (like taking a ride in a car) can be detected. The MX2125 converts the temperature measurements into signals (pulse durations) that are easy for microcontrollers to measure and decipher.

## Pin Definitions

For Memsic MXD2125GL pin ratings, see the manufacturer's datasheet posted on the 28017 product page at www.parallax.com.

| Pin | Name | Function |
|---|---|---|
| 1 | Tout | Temperature Out |
| 2 | Yout | Y-axis PWM output |
| 3 | GND | Ground -> 0 V |
| 4 | GND | Ground -> 0 V |
| 5 | Xout | X-axis PWM output |
| 6 | VDD | Input voltage: +3.3 to +5 VDC |

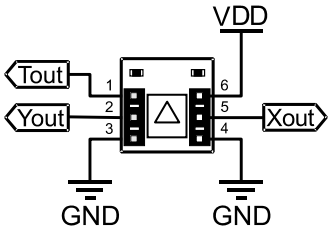


## Communication Protocol

Each axis has a 100 Hz PWM duty cycle output in which acceleration is proportional to the ratio tHx/Tx. In practice, we have found that Tx is consistent so reliable results can be achieved by measuring only the duration of tHx. This is easy to accomplish with the BASIC Stamp PULSIN command or with the Propeller chip's counter modules.

With Vdd = 5V, 50% duty cycle corresponds to 0 g, but this will vary with each individual unit within a range of 48.7% to 51.3%. This zero offset may be different when using Vdd = 3.3 V. See the manufacturer's datasheet for details.

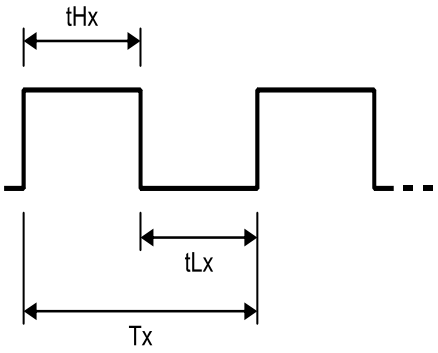


## Example Circuit

The example schematic and wiring diagram below are for the BASIC Stamp and Board of Education.

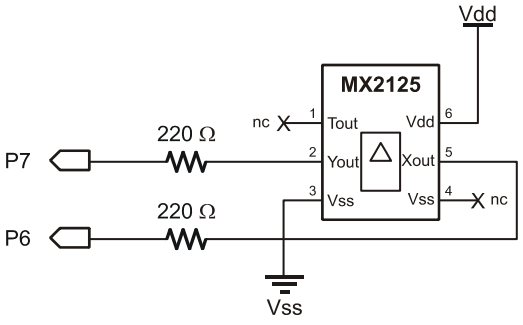


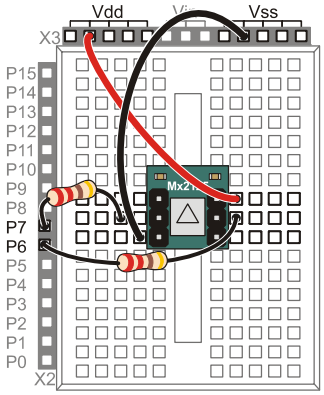


The program below, SimpleTilt.bs2, simply measures the pulse width, that is, the duration of tHx, for each axis. The raw values are displayed in the BASIC Stamp Editor's Debug Terminal. If you run the program, then tilt the accelerometer, you should see the values for each axis change.

```
' Smart Sensors and Applications - SimpleTilt.bs2
' Measure room temperature tilt.

'{$STAMP BS2}
'{$PBASIC 2.5}

x               VAR     Word
y               VAR     Word

DEBUG CLS

DO

  PULSIN 6, 1, x
  PULSIN 7, 1, y

  DEBUG HOME, DEC4 ? X, DEC4 ? Y

  PAUSE 100

LOOP
```

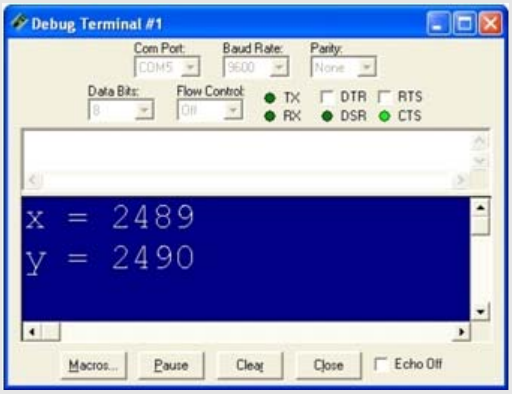


# Programming Resources and Downloads

## BASIC Stamp

- **Smart Sensors and Applications** — The BASIC Stamp example above is taken from the Stamps in Class text *Smart Sensors and Applications*, which features several chapters specific to the Memsic Dual-Axis Accelerometer. Topics include output scaling and offset, measuring vertical rotation, tilt-controlled video gaming basics, data logging g-force during a skateboard trick, and data logging acceleration on an RC car. The book and sample code can be downloaded from the 28029 product page at http://www.parallax.com

- **Boe-Bot Robot Projects with the Memsic 2125 Accelerometer** — The following projects with source code are posted under the Stamps in Class Mini-Projects sticky-thread in the Stamps in Class Forum at http://forums.parallax.com:
  - Boe-Bot Robot Navigation with Accelerometer Incline Sensing
  - A Tilt Radio Controller for Your Boe-Bot
- **The Memsic 2125 Demo Kit BASIC Stamp Source Code** — this source code contains conditional compile directives that allow it to be used with the BS2, BS2e, BS2sx, BS2p, and BS2pe.

## Propeller Objects

Several Memsic 2125 Accelerometer code objects and applications for the Propeller chip are available in the Propeller Object Exchange (http://obex.parallax.com).




Below is a photograph of the high-speed Memsic MXD2125 Accelerometer Demo in action. This application "provides a high speed assembly driver, and separate-cog and same-cog Spin versions of the MXD2125 Dual Axis Accelerometer. The high speed version displays the data on a television as a 3D wireframe plane with normal vector.

# iC-LFL1402

256x1 LINEAR IMAGE SENSOR

preliminary



## FEATURES

- 256 active photo pixels of 56 µm at a gap and distortion free pitch of 63.5 µm (400 DPI)
- Integrating L-V conversion followed by a sample & hold circuit
- High sensitivity and uniformity over wavelength
- High clockrates of up to 5 MHz
- Only 256 clocks required for readout
- Shutter function enables flexible integration times
- Glitch-free analogue output
- Push-pull output amplifier
- 5 V single supply operation
- Can run off external bias to reduce power consumption
- Function equivalent to TSL1402 (serial mode)

## APPLICATIONS

- Optical line sensors
- CCD substitute

## PACKAGES



OBGA™ LFL1C

## BLOCK DIAGRAM

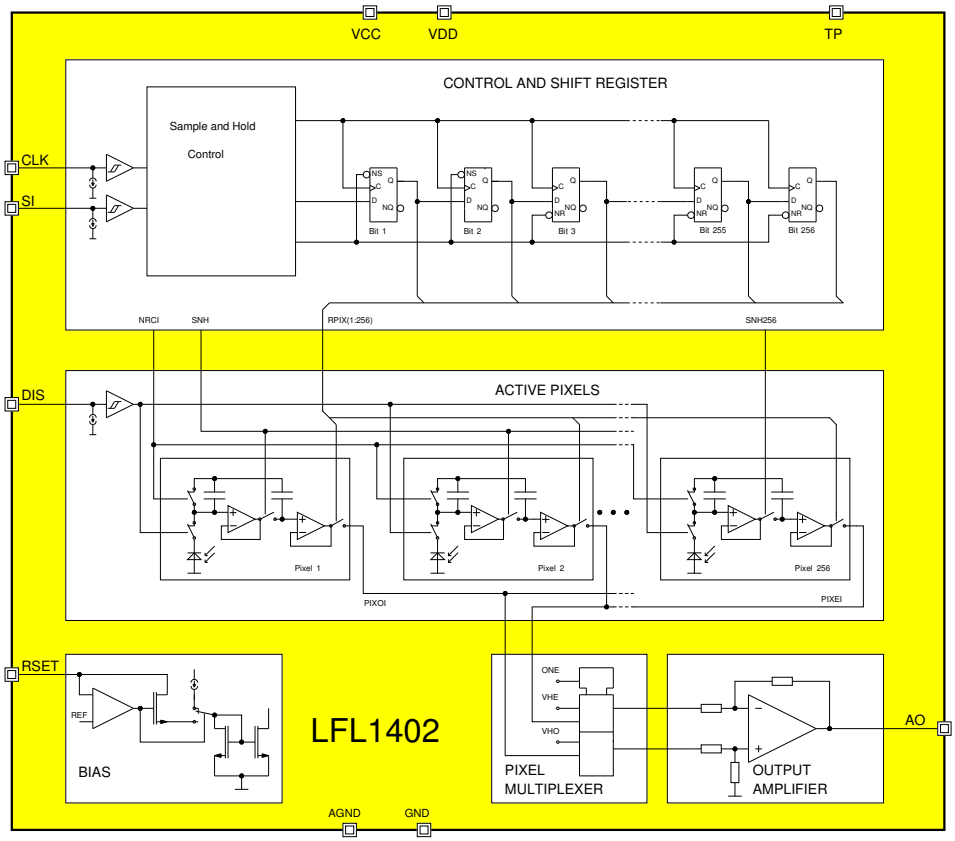


Copyright © 2006 iC-Haus

## DESCRIPTION

iC-LFL1402 is an integrating light-to-voltage converter with a single line of 256 pixels pitched at 63.5 µm (center-to-center distance). Due to the monolithical integration there is no pixel-gap or pitch distortion whatsoever. Each pixel consists of a 56.4 µm x 200 µm photodiode, an integration capacitor and a sample and hold circuit.

The integrated control logic makes operation very simple, with only a start and clock signal necessary. A third control input enables the integration period to be prematurely terminated at any time (electronic shutter).

When the start signal is given the hold mode is activated for all pixels simultaneously with the next rising clock edge; starting with pixel 1 the hold voltages are switched in sequence to the push-pull output amplifier. The second clock pulse deletes all integration capacitors and the integration period starts again in the background during the output phase. A run is complete after 256 clock pulses.

iC-LFL1402 is suitable for high clock rates of up to 5 MHz. If this is not required the supply current can be reduced via the external bias setting.

## PACKAGES OBGA™ LFL1C

### PIN CONFIGURATION OBGA™ LFL1C (top view)

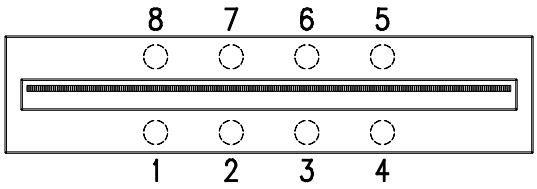


### PIN FUNCTIONS

| No. | Name | Function |
|---|---|---|
| 1 | SI | Start Integration Input |
| 2 | CLK | Clock Input |
| 3 | AO | Analogue Output |
| 4 | VCC | +5 V Supply Voltage |
| 5 | RSET | Bias Current (resistor from VCC to RSET; when connected to GND the internal bias setting is activated) |
| 6 | AGND | Analogue Ground |
| 7 | GND | Digital Ground |
| 8 | DIS | Disable Integration Input |

## CHIP-LAYOUT

**iC-LFL1402**
Chip size: 16.6 mm x 1.7 mm

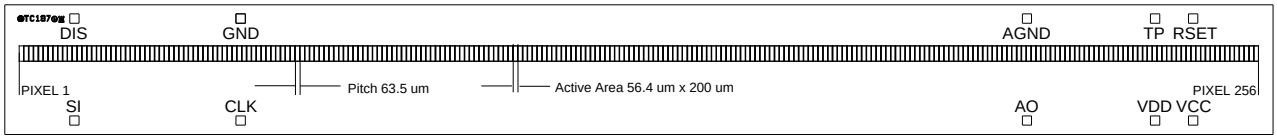

## ABSOLUTE MAXIMUM RATINGS

Beyond these values damage may occur; device operation is not guaranteed.

| Item No. | Symbol | Parameter | Conditions | Fig. | Min. | Max. | Unit |
|---|---|---|---|---|---|---|---|
| G001 | VDD | Digital Supply Voltage | | | -0.3 | 6 | V |
| G002 | VCC | Analogue Supply Voltage | | | -0.3 | 6 | V |
| G003 | V() | Voltage at SI, CLK, DIS, RSET, TP, AO | | | -0.3 | VCC + 0.3 | V |
| G004 | I() | Current in RSET, TP, AO | | | -10 | 10 | mA |
| G005 | Vd() | ESD Susceptibility at all pins | MIL-STD-883, Method 3015, HBM 100 pF/1.5 kΩ | | | 2 | kV |
| G006 | Tj | Operating Junction Temperature | | | -40 | 125 | °C |
| G007 | Ts | Storage Temperature Range | see package specification OBGA™ LFL1C | | | | |

## THERMAL DATA

Operating Conditions: VCC = VDD = 5 V ±10%

| Item No. | Symbol | Parameter | Conditions | Fig. | Min. | Typ. | Max. | Unit |
|---|---|---|---|---|---|---|---|---|
| T01 | Ta | Operating Ambient Temperature Range | see package specification OBGA™ LFL1C | | | | | |

All voltages are referenced to ground unless otherwise stated.
All currents into the device pins are positive; all currents out of the device pins are negative.

## ELECTRICAL CHARACTERISTICS

Operating Conditions: VCC = VDD = 5 V ±10%, RSET = GND, Tj = -25...85 °C unless otherwise noted

| Item No. | Symbol | Parameter | Conditions | Tj °C | Fig. | Min. | Typ. | Max. | Unit |
|---|---|---|---|---|---|---|---|---|---|
| **Total Device** | | | | | | | | | |
| 001 | VDD | Digital Supply Voltage Range | | | | 4.5 | | 5.5 | V |
| 002 | VCC | Analogue Supply Voltage Range | | | | 4.5 | | 5.5 | V |
| 003 | I(VDD) | Supply Current in VDD | f(CLK) = 1 MHz<br>f(CLK) = 5 MHz | | | | 0.39<br>1.85 | | mA<br>mA |
| 004 | I(VCC) | Supply Current in VCC | | | | | 11.5 | | mA |
| 005 | Vc()hi | Clamp Voltage hi at SI, CLK, DIS, TP, RSET | Vc()hi = V() − V(VCC);<br>I() = 1 mA | | | 0.3 | | 1.8 | V |
| 006 | Vc()lo | Clamp Voltage lo at SI, CLK, DIS, TP, RSET | Vc()hi = V() − V(AGND);<br>I() = -1 mA | | | -1.5 | | 0.3 | V |
| 007 | Vc()hi | Clamp Voltage hi at AO | Vc()hi = V(AO) − V(VCC);<br>I(AO) = 1 mA | | | 0.3 | | 1.5 | V |
| 008 | Vc()lo | Clamp Voltage lo at AO, VCC, VDD, GND | Vc()lo = V() − V(AGND);<br>I() = -1 mA | | | -1.5 | | -0.3 | V |
| **Photodiode Array** | | | | | | | | | |
| 201 | A() | Radiant Sensitive Area | 200 µm x 56.40 µm per Pixel | | | | 0.01128 | | mm² |
| 202 | S(λ)max | Spectral Sensitivity | λ = 680 nm | | 1 | | 0.5 | | A/W |
| 203 | $\lambda_{ar}$ | Spectral Application Range | S($\lambda_{ar}$) = 0.25 x S(λ)max | | 1 | 400 | | 980 | nm |
| **Analogue Output AO** | | | | | | | | | |
| 301 | Vs()lo | Saturation Voltage lo | I() = 1 mA | | | | | 0.5 | V |
| 302 | Vs()hi | Saturation Voltage hi | Vs()hi = VCC - V(), I() = -1 mA | | | | | 1 | V |
| 303 | K | Sensitivity | λ = 680 nm,<br>package OBGA™ LFL1C | | | | 2.88 | | V/pWs |
| 304 | V0() | Offset Voltage | integration time 1 ms,<br>no illumination | | | | 400 | 800 | mV |
| 305 | ΔV0() | Offset Voltage Deviation during integration mode | ΔV0() = V(AO)t1 − V(AO)t2,<br>Δt = t2 − t1 = 1 ms | | | -250 | | 50 | mV |
| 306 | ΔV() | Signal Deviation during hold mode | ΔV0() = V(AO)t1 − V(AO)t2,<br>Δt = t2 − t1 = 1 ms | | | -150 | | 150 | mV |
| 307 | tp(CLK-AO) | Settling Time | Cl(AO) = 10 pF, CLK lo → hi until V(AO) = 0.98 x V(VCC) | | | | | 200 | ns |
| **Power-On-Reset** | | | | | | | | | |
| 801 | VCCon | Power-On Release by VCC | | | | | | 4.4 | V |
| 802 | VCCoff | Power-Down Reset by VCC | | | | 1 | | | V |
| 803 | VCChys | Hysteresis | VCChys = VCCon − VCCoff | | | 0.4 | 1 | 2 | V |
| **Bias Current Adjust RSET** | | | | | | | | | |
| 901 | Ibias() | Permissible External Bias Current | | | | 20 | | 100 | µA |
| 902 | Vref | Reference Voltage | I(RSET) = Ibias | | | 2.5 | 3 | 3.5 | V |
| **Input Interface SI, CLK, DIS** | | | | | | | | | |
| B01 | Vt()hi | Threshold Voltage hi | | | | 1.4 | | 1.8 | V |
| B02 | Vt()lo | Threshold Voltage lo | | | | 0.9 | | 1.2 | V |
| B03 | Vt()hys | Hysteresis | Vt()hys = Vt()hi − Vt()lo | | | 300 | | 800 | mV |
| B04 | I() | Pull-Down Current | | | | 10 | 30 | 50 | µA |
| B05 | fclk | Permissible Clock Frequency | | | | | | 5 | MHz |

## OPTICAL CHARACTERISTICS: Diagrams

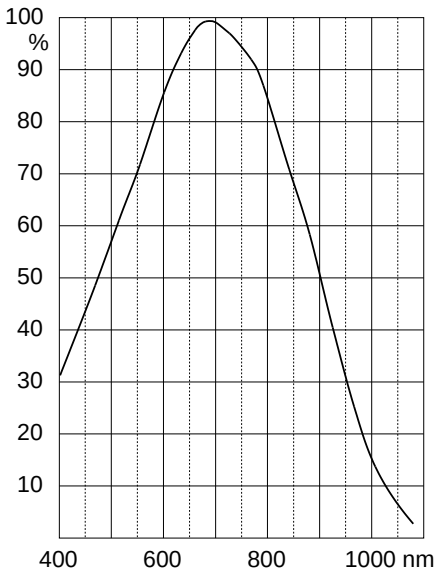


Figure 1: Relative spectral sensitivity

## OPERATING REQUIREMENTS: Logic

Operating Conditions: VCC = VDD = 5 V ±10%, Tj = -25...85 °C
input levels lo = 0...0.45 V, hi = 2.4 V...VCC, see Fig. 2 for reference levels

| Item No. | Symbol | Parameter | Conditions | Fig. | Min. | Max. | Unit |
|---|---|---|---|---|---|---|---|
| I001 | tset | Setup Time:<br>SI stable before CLK lo → hi | | 3 | 50 | | ns |
| I002 | thold | Hold Time:<br>SI stable after CLK lo → hi | | 3 | 50 | | ns |

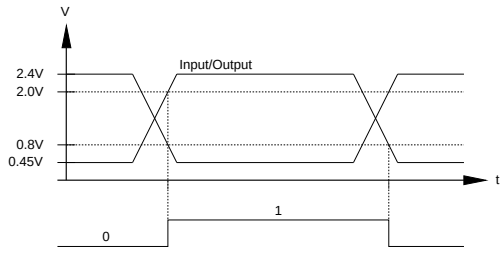


Figure 2: Reference levels

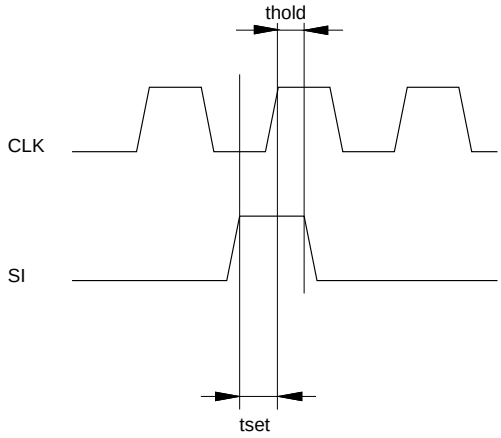


Figure 3: Timing diagram

## DESCRIPTION OF FUNCTIONS

**Normal operation**
Following an internal power-on reset the integration and hold capacitors are discharged and the sample and hold circuit is set to sample mode. A high signal at SI and a rising edge at CLK triggers a readout cycle and with it a new integration cycle.

In this process the hold capacitors of pixels 1 to 255 are switched to hold mode immediately (SNH = 1), with pixel 256 (SNH256 = 1) following suit one clock pulse later. This special procedure allows all pixels to be read out with just 256 clock pulses. The integration capacitors are discharged by a one clock long reset signal (NRCI = 0) which occurs between the 2nd and 3rd falling edge of the readout clock pulse (cf. Figure 4). After the 255 pixels have been read out these are again set to sample mode (SNH = 0), likewise for pixel 256 one clock pulse later (SNH256 = 0).

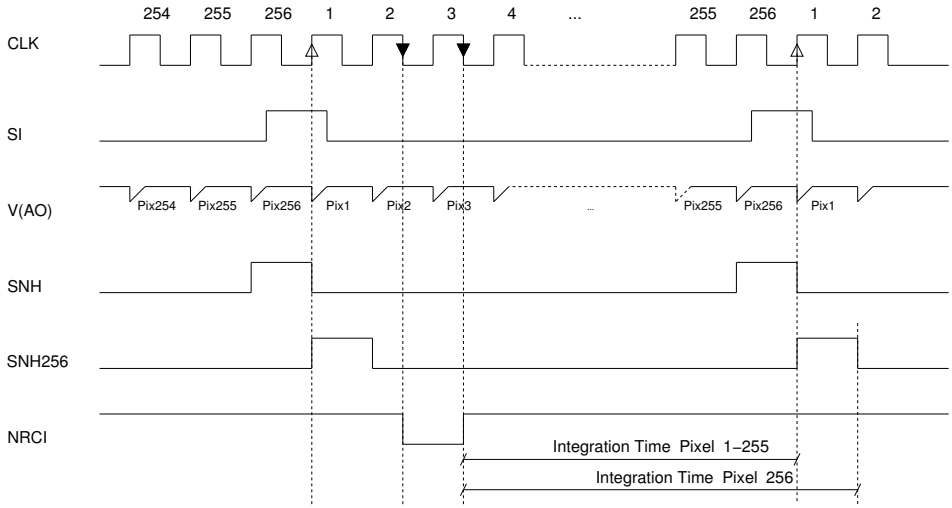


Figure 4: Readout cycle and integration sequence

If prior to the 256th clock pulse a high signal occurs at SI the present readout is halted and immediately reinitiated with pixel 1. In this instance the hold capacitors retain their old value i.e. hold mode prevails (SNH/SNH256 = 0).

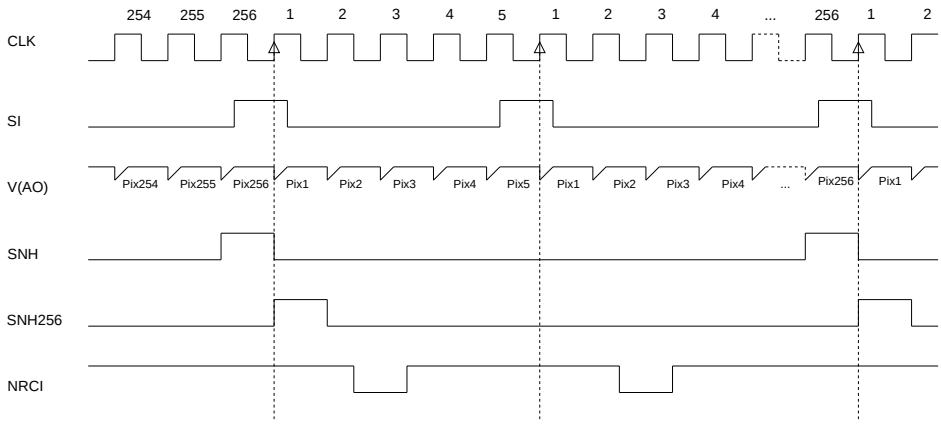


Figure 5: Restarting a readout cycle

With more than 256 clock pulses until the next SI signal, pixel 1 is output without entering hold mode; the output voltage tracks the voltage of the pixel 1 integration capacitor.

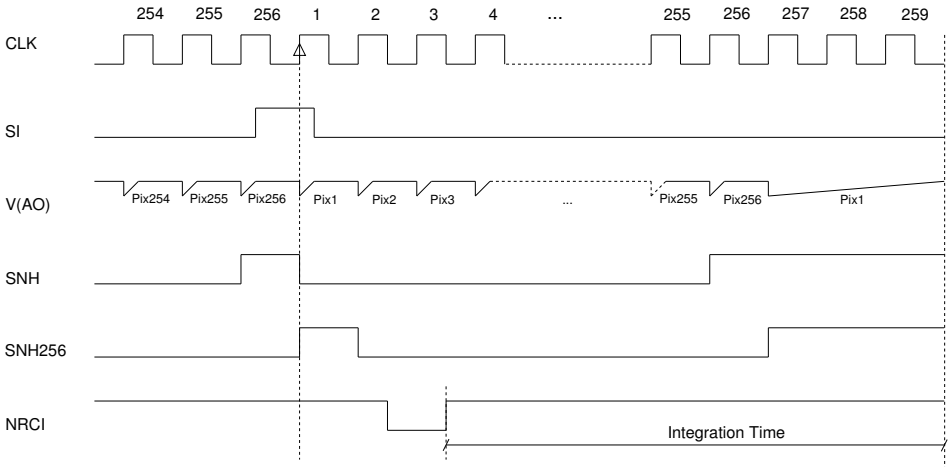


Figure 6: Clock pulse continued without giving a new integration start signal

**Operation with the shutter function**

Integration can be stopped at any time via pin DIS, i.e. the photodiodes are disconnected from their corresponding integration capacitor when DIS is high and the current integration capacitor voltages are maintained. If this pin is open or switched to GND the pixel photocurrents are summed up by the integration capacitors until the next successive SI signal follows.

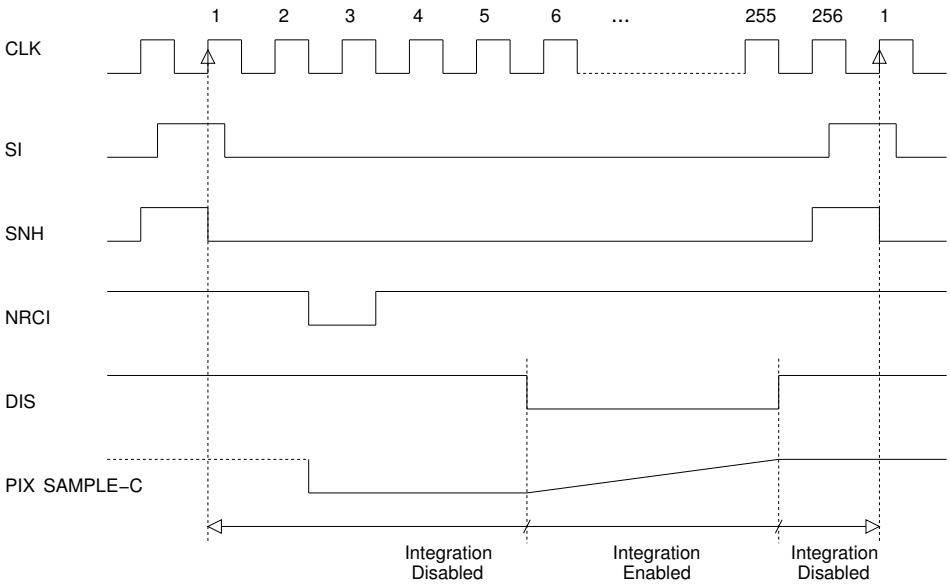


Figure 7: Defining the integration time via shutter input DIS

**External bias current setting**

In order to reduce the power consumption of the device an external reference current can be supplied to pin RSET which reduces the maximum readout frequency, however. To this end a resistor must be connected from VCC to RSET. If this pin is not used, it should be connected to GND.

This specification is for a newly developed product. iC-Haus therefore reserves the right to change or update, without notice, any information contained herein, design and specification; and to discontinue or limit production or distribution of any product versions. Please contact iC-Haus to ascertain the current data.
Copying – even as an excerpt – is only permitted with iC-Haus approval in writing and precise reference to source.
iC-Haus does not warrant the accuracy, completeness or timeliness of the specification on this site and does not assume liability for any errors or omissions in the materials. The data specified is intended solely for the purpose of product description. No representations or warranties, either express or implied, of merchantability, fitness for a particular purpose or of any other nature are made hereunder with respect to information/specification or the products to which information refers and no guarantee with respect to compliance to the intended use is given. In particular, this also applies to the stated possible applications or areas of applications of the product.
iC-Haus conveys no patent, copyright, mask work right or other trade mark right to this product. iC-Haus assumes no liability for any patent and/or other trade mark rights of a third party resulting from processing or handling of the product and/or any other use of the product.

## ORDERING INFORMATION

| Type | Package | Order Designation |
|---|---|---|
| iC-LFL1402 | OBGA™ LFL1C<br>- | iC-LFL OBGA LFL1C<br>iC-LFL Chip |

For information about prices, terms of delivery, other packaging options etc. please contact:

**iC-Haus GmbH**
**Am Kuemmerling 18**
**D-55294 Bodenheim**
**GERMANY**

**Tel.: +49 (61 35) 92 92-0**
**Fax: +49 (61 35) 92 92-192**
**Web: http://www.ichaus.com**
**E-Mail: sales@ichaus.com**

# Low power Bluetooth™ Module with antenna- F2M03GLA

**Datasheet**

## Features

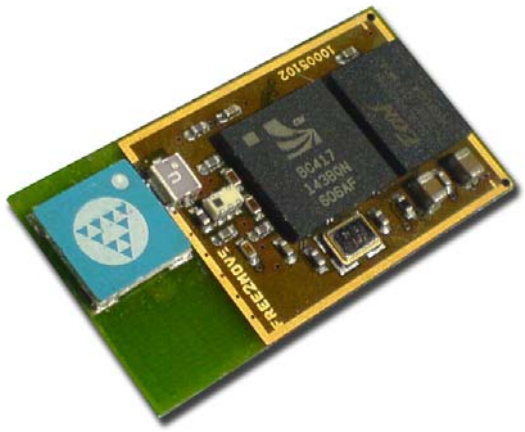

- Fully qualified end product with
- Bluetooth™ v2.0+EDR, CE and FCC
- Low power consumption
- Integrated high output antenna
- Transmit power up to +8dBm
- Class1/ 2/ 3 Configurable
- Range up to 350m (line of sight)
- Piconet and Scatternet capability, support for up to 7 slaves
- Require only few external components
- Industrial temperature range -40°C to +85°C
- USB v2.0 compliant
- Extensive digital and analog I/O interface
- PCM interface for up to 3 simultaneous voice channels
- Large external memory for custom applications
- Support for 802.11b/g Co-Existence
- RoHS compliant

## Applications

- Industrial and domestic appliances
- Cable replacement
- Medical systems
- Automotive applications
- Stand-alone sensors
- Embedded systems
- Cordless headsets
- Computer peripherals (Mice, Keyboard, USB dongles, etc.)
- Handheld, laptop and desktop computers
- Mobile phones

Pb-Free

RoHS COMPLIANT 2002/96/EC

Bluetooth™

BLUETOOTH is a trademark owned by
Bluetooth SIG, Inc., U.S.A. and licensed to Free2move

## General Description

F2M03GLA is a Low power embedded Bluetooth™ v2.0+EDR module with built-in high output antenna. The module is a fully Bluetooth™ compliant device for data and voice communication. With a transmit power of up to +8dBm and receiver sensibility of down to –83dBm combined with low power consumption the F2M03GLA is suitable for the most demanding applications. Developers can easily implement a wireless solution into their product even with limited knowledge in Bluetooth™ and RF. The module is fully Bluetooth™ v2.0+EDR qualified and it is certified according to CE and FCC, which give fast and easy Plug-and-Go implementation and short time to market.

The F2M03GLA comes with an on board highly efficient omni-directional antenna that simplifies the integration for a developers Bluetooth™ solution. The high output power combined with the low power consumption makes this module ideal for handheld applications and other battery powered devices.

F2M03GLA can be delivered with the exceedingly reliable and powerful easy-to-use Wireless UART firmware implementing the Bluetooth™ Serial Port Profile (SPP).

# C Documentation of software

The following documentation has been done:

**1** Requirements VerApp

**2** RAD (Requirements and Analysis Document) VerApp

**3** RAD (Requirements and Analysis Document) VerApp Desktop

**4** Use Cases VerApp

## C.1 RequirementsVerApp

**Visible requirements:**

ID 1.01: Start application
ID 1.02: Present data to the driver (speed, lap time, total time)
ID 1:03: The driver can report to the team if something occurs.
ID 1.04: Exit the application

**System requirements:**

ID 2.01: Logging the car position
ID 2.02: Connecting the position data to the engine data
ID 2.03: Present engine data and GPS position on the computer
ID 2.04: Logging of engine data from ECU
ID 2.05: Data from the current run saved onto the cellphone
ID 2.06: Possible logging data from DAQ
ID 2.07: Stop logging data
ID 2.08: Sending engine data and position data through 3G
ID 2.09: Sending engine data and position data through Wi-Fi

# Visible requirements:

### Start application

ID 1.01
**Use case / scenario:**
Start the application.
**Trigger:**
The user launches the app.
**Precondition:**
The application is installed.
**Basic path:**
The main screen is shown to the user.
**Exception path:**
N/A
**Post condition:**
The main screen is shown to the user.

### Present data to the driver (speed, lap time, total time)

ID 1.02
**Use case / scenario:** Present speed, average speed, lap time, total time of run to driver.
**Trigger:** Startbutton on application
**Precondition:** Timer-, GPS-function is started.
**Basic path:** The application is using GPS-data and timer to calculate speed, average speed, lap time and total time. Present data on main-screen of application.
**Exception path:** Restart and try again.
**Post condition:** Saving data and calculating speed while running.

### The driver can report to the team if something occurs.

ID 1.03

**Use case / scenario:**

By a button the driver can notify the team that something has occurred.

**Trigger:**

Action button

**Precondition:**

Application is started.

**Basic path:**

Stores location and time when the event occurred.

**Exception path:**

Saved to phone storage. Sent when connection is available.

**Post condition:**

Data is either sent or stored. Confirmation message should be displayed for a couple of seconds.

### Exit the application

ID 1.04

**Use case / scenario:**

Exit application

**Trigger:**

Exit button on application.

**Precondition:**

Application is running and is not logging data.

**Basic path:**

The precondition is fulfilled and exit button is pressed.

**Exception path:**

Application is facing an unexpected shutdown.

**Post condition:**

The logging of data is stopped and the application shut down

## System requirements:

### Logging the car position

ID 2.01

**Use case / scenario:**

The application is saving the GPS-data given by the GPS.

**Trigger:**

The logging of GPS data starts then the start-/resume botton is pressed

**Precondition:**

The application is started. The GPS is activated.

**Basic path:**



The GPS-data is saved onto the cell phone.

**Exception path:**
N/A
**Post condition:**
There is GPS data available on the cell phone.

## Connecting the position data to the engine data

ID 2.02
**Use case / scenario:**
The position data och engine data sent to the application are combined.
**Trigger:**
Continuosly when data are availiable
**Precondition:**
Application is started and data are availiable
**Basic path:**
The data are associated with each other..
**Exception path:**
N/A
**Post condition:**
The position data and motor control data are connected

## Present engine data and GPS position on the computer

ID 2.03
**Use case / scenario:**
**Trigger:**
**Precondition:**
Data has been acquired from the web server and is stored on the computer.
**Basic path:**
**Exception path:**
N/A
**Post condition:**

## Logging of engine data from ECU

ID 2.04
**Use case / scenario:**
Read and save bit-data from USB-bus.
**Trigger:**
Then the start- /resume button is pressed
**Precondition:**
USB connected, ECU-bus initialized.
**Basic path:**
Setup and initialize start register in ECU, send start command to ECU.
**Exception path:**
Restart setup.
**Post condition:**

Bit data is read from the bus.

## Data from the current run saved onto the cellphone

ID 2.05
**Use case / scenario:** Log-data is saved to cellphone while data logging is running.
**Trigger:** Start when data logging is started.
**Precondition:** Data logging is started.
**Basic path:** Read input stream from USB-bus and write to a textfile
**Exception path:** Log exception and restart write-process.
**Post condition:** Data is written to text file which is saved on the phone

## Logging data from DAQ

ID 2.06
**Use case / scenario:** Receive data from DAQ-sensors to ECU and logg the data in the application on the phone.
**Trigger:** Start-/ resume button is being pressed
**Precondition:** DAQ-sensors are started and connection established to the ECU by an arduino.
**Basic path:** Data sent from DAQ to the application through the arduino and the ECU.
**Exception path:** N/A
**Post condition:** The data from the DAQ is saved onto the phone

## Stop logging data

ID 2.07
**Use case / scenario:**
The application stops to log data.
**Trigger:**
User clicks the stop button.
**Precondition:**
Application is logging data.
**Basic path:**
Application is logging data and the user clicks stop button. The app stops the data logging.
**Exception path:**
N/A
**Post condition:**
Data logging is turned off.

## Sending logged data and position data through 3G

ID 2.08
**Use case / scenario:**
Logged data with its position is sent to web server through 3G.
**Trigger:**

Sent regularly with predefined interval when the logging is started.

**Precondition:**

Application is started and logging is activated.

**Basic path:**

Data is sent to web server.

**Exception path:**

If no 3G connection is available, the data is stored and sent when connection is available.

**Post condition:**

Data is sent.

## Sending logged data and position data through Wi-Fi

ID 2.09

**Use case / scenario:**

Logged data with it's position is sent to web server through Wi-Fi.

**Trigger:**

Sent regularly with predefined interval when the logging is started.

**Precondition:**

Application is started and logging is activated.

**Basic path:**

Data is sent to web server.

**Exception path:**

If no Wi-Fi connection is available, the data is stored and sent through 3G.

**Post condition:**

Data is sent.

## C.2 RAD VerApp

**Requirements and Analysis Document for "VerApp"**

Table of Contents


1 Introduction
- 1.1 Purpose of application
- 1.2 General characteristics of application
- 1.3 Scope of application
- 1.4 Objectives and success criteria of the project
- 1.5 Definitions, acronyms and abbreviations

2 Proposed application
- 2.1 Overview
- 2.2 Functional requirements
- 2.3 Non-functional requirements
  - 2.3.1 Usability
  - 2.3.2 Reliability
  - 2.3.3 Performance
  - 2.3.4 Supportability
  - 2.3.5 Implementation
  - 2.3.6 Verification
  - 2.3.7 Packaging and installation
  - 2.3.8 Legal
- 2.4 Test Cases
- 2.5 Possible future directions
- 2.6 References

APPENDIX


Version: 1.0.1

Date: 2013-05-19

This version overrides all previous versions.

## 1 Introduction

Since the ECU can not communicate directly with a computer wirelessly this project is going to have a smartphone which is connected to the ECU and then handles further communication. To make this possible an application is going to be developed. The phone will also work as a dashboard for the driver.

### 1.1 Purpose of application

The purpose of the application is to make it possible for the ECU to communicate wirelessly with a computer. The application shall acquire data from the ECU and forward it. The application shall also present important information to the driver.

### 1.2 General characteristics of application

Our aim is an application that will run smoothly on the phones chosen for this project. The finished product will at least contain the possibility to log data from the ECU and a dashboard.

### 1.3 Scope of application

The final goal is that we can provide real time logging of data and present this to the team, but in case of lack of time and/or possibility to present data in a simple and smooth way, the most important thing is the possibility of logging data.

### 1.4 Objectives and success criteria of the project

The objective of the application is to provide the driver with information about total run time, average speed, lap time, steering and speed. The application shall also handle all communication with the ECU and send the data received from the ECU to a web server.

The minimum criteria for success is that the application is able to retrieve data from the ECU and then either present it on the cell phone or upload it on the web server.

### 1.5 Definitions, acronyms and abbreviations

ECU - Engine Controller Unit, placed inside the car.
App - Android Application
GUI - Graphical user interface
Google Play - Google's official platform for selling Android-applications
DAQ - Data Acquisition system

## 2 Proposed application

Based on the information provided above. There will be presented an application which is providing a solution.

### 2.1 Overview

The goal of VerApp is to provide a graphical user interface, to initiate the communication with the ECU and to save and forward data received from the ECU.

### 2.2 Functional requirements

- Logging of engine data from ECU
- Sending engine data and position data through 3G
- Sending engine data and position data through Wi-Fi
- Logging of car's position

- Associate the position data with the engine data
- Data from the current run saved onto the smartphone
- The driver can report to the team if something occurs during the run. (graphic interface for the vehicle's position in real time)
- Exit the app
- Reset session
- Possible logging data from DAQ
- Present data to the driver (speed, average speed, lap time, total time, steering)

### 2.3 Non-functional requirements

- Data is transferred with expected time resolution
- Data can be saved onto the cell phone until it can be transferred onto a computer
- Data shall be transferred in a cost efficient manner
- Data shall be transferred in a way that minimizes the risk of data loss

#### 2.3.1 Usability

The application shall be used by a person in Chalmers Vera Team. It is important that the application can be handled by a person wearing gloves which means that there can not be any button that are small and any keyboard interaction.

#### 2.3.2 Reliability

As the application relies on having either a 3G- or Wifi-network available some care will have to be put into a solution for when neither of these is available. This will be done be saving all data on the smartphone until it can be uploaded to the web server.

Apart from this, there aren't many reliability issues at hand as the application is rather simple in addition to the fact that the phone used will likely not be required to handle any other tasks while running the application.

#### 2.3.3 Performance

Since the application will be pretty light, the only performance issues could be with data transfer. Our goal is that data should be transferred in a safe and controlled way with as little data loss as possible.

#### 2.3.4 Supportability

The application will be developed for Android 4.0 and newer. Due to this, phones having older OS will not be able to use the app. The application is also somewhat customized to the specific ECU-model SA3000 from Civinco.

#### 2.3.5 Implementation

The application will be implemented with Java, using version 4.0 of the Android OS, Ice Cream Sandwich (ICS).

#### 2.3.6 Verification

The application will be verified in collaboration with the Chalmers Vera team which will, at least early on, be the application's primary user.

#### 2.3.7 Packaging and installation

Due to the tight relationship with the ECU-provider Civinco the application may not be available on Google

Play but rather as a .apk-file which Android-phones are able to install with some simple configuration.

#### 2.3.8 Legal

Our goal is to own everything by ourselves and not use any third party applications during the development of this app.

## C.3 RAD VerApp Desktop

**Requirements and Analysis Document for "VerApp Desktop"**

Table of Contents


1 Introduction
- 1.1 Purpose of application
- 1.2 General characteristics of application
- 1.3 Scope of application
- 1.4 Objectives and success criteria of the project
- 1.5 Definitions, acronyms and abbreviations

2 Proposed application
- 2.1 Overview
- 2.2 Functional requirements
- 2.3 Non-functional requirements
  - 2.3.1 Usability
  - 2.3.2 Reliability
  - 2.3.3 Performance
  - 2.3.4 Supportability
  - 2.3.5 Implementation
  - 2.3.6 Verification
  - 2.3.7 Packaging and installation
  - 2.3.8 Legal
- 2.4 Test Cases
- 2.5 Possible future directions
- 2.6 References

APPENDIX


Version: 1.0.0

Date: 2013-02-05

This version overrides all previous versions.

## 1 Introduction

Since Android does not support handling an external database, the mobile application sends the data to a web server and from there the data will need to be fetched. Since the desktop application developed by Civinco (the manufacturers of the ECU) does not support real time update of data a desktop application needed to be developed.

### 1.1 Purpose of application

The purpose of the application is to acquire data from the web server and then present it in a manner more suitable for a group of people.

### 1.2 General characteristics of application

The application runs smoothly on an arbitrarily chosen PC. It provides a graphical user interface where data is presented to the user in the form of a chart.

### 1.3 Scope of application

The application fetches the data from the web server and presents it to the user. The current version does not support changing of engine parameters in the ECU. Neither does it provide the user with the possibility of seeing on a map where the data was logged.

### 1.4 Objectives and success criteria of the project

The objective of the application is to provide the team with data from the ECU and DAQ and present the data to the race team in a relevant manner through a chart.

The minimum criteria is that the data is presented to the user. Displaying a map is a desirable feature.

### 1.5 Definitions, acronyms and abbreviations

ECU - Engine Controller Unit
App - Android Application
GUI - Graphical user interface
DAQ - Data Acquisition system

## 2 Proposed application

Based on the information provided above. There will now be presented an application which is providing a solution.

### 2.1 Overview

The desktop application shall retrieve data from web server and present it to the user in a relevant way.

### 2.2 Functional requirements

- Retrieving data from web server via 3G
- Retrieving data from web server via WiFi
- Present data to user
- Present relevant graphs

### 2.3 Non-functional requirements

- Data shall be transferred with expected time resolution
- Data shall be transferred in a cost efficient manner
- Data shall be transferred in a way that minimizes the risk of data loss
- It is possible to call while data continues to be logged

#### 2.3.1 Usability

When designing the GUI care was taken to make it sufficiently similar to the one currently used as to ease the transition as well as creating a very easy-to-use interface with minimal clutter.

#### 2.3.2 Reliability

As the application relies on having either a 3G- or Wifi-network available some care will have to be put into a solution for when neither of these is available. The data will be saved onto the web server until there is 3G- or WiFi-connection available to enable the desktop application can fetch it.

#### 2.3.3 Performance

Since the application will be pretty light, the only performance issues could be with data transfer. Our goal is that data should be transferred in a safe and controlled way with as little data loss as possible.

#### 2.3.4 Supportability

The application will be developed for Android 4.0 and newer. Due to this, older phones will not be able to use the app.

#### 2.3.5 Implementation

The application will be implemented in Java, using a few external libraries. In addition, some PHP will be used for supporting functions.

#### 2.3.6 Verification

The application will be verified in collaboration with the Chalmers Vera team which will, at least early on, be the application's primary user.

#### 2.3.8 Legal

The application will not use any non-open source code.

### 2.4 Test Cases

## C.4 Use Cases VerApp

*ID:* 1
*Name:* Install application
*Includes:* -
*Actor:* User
*Goal:* To install the application.
*Description:* Installation file is transferred to the phone and is initiated.

*ID:* 2
*Name:* Start application
*Includes:* Install application
*Actor:* User
*Goal:* Start application
*Description:* Prepare the application for using

*ID:* 3
*Name:* Enable GPS
*Includes:* Start application
*Actor:* User
*Goal:* Enable GPS
*Description:* Enable GPS before starting run mode.

*ID:* 4
*Name:* Start run mode
*Includes:* Start application, Enable GPS
*Actor: User*
*Goal: To start the run mode.*
*Description:* User presses the start button when GPS signal has been allocated.

*ID:* 5
*Name:* View values
*Includes:* Start run mode
*Actor:* -
*Goal: Present speed, average speed, steering, total time and lap times.*
*Description:* Display values on the screen in run mode.

*ID:* 6
*Name:* Report incident
*Includes:* Start run mode.
*Actor:* User
*Goal:* Set warning flag.
*Description:* Flag later viewed together with logged data

*ID:* 7
*Name:* Press stop button
*Includes:* Start run mode.
*Actor:* User

*Goal:* Pause logging and race values. Show possibility to end session.
*Description:* Pause logging and race values. Shows a summarization of the race together with the option of ending the session.

*ID:* 8
*Name: End session*
*Includes:* Press stop button
*Actor: User*
*Goal: Go back to the start screen.*
*Description: Go back to the start screen and end the current session.*

*ID:* 9
*Name:* Transfer data
*Includes: -*
*Actor: -*
*Goal:* To transfer loggdata from phone to computer through HTTP protocol.
*Description:* Transfer collected data from the phone to computer.

*ID:* 10
*Name: Reset application*
*Includes: -*
*Actor: User*
*Goal: Go back to initial screen*
*Description:* Close current session and send user to initial start view. All values are reset.

*ID:* 11
*Name: Exit application*
*Includes: -*
*Actor: User*
*Goal: To exit the app.*
*Description:* User clicks exit button. App with all related threads are shutdown.